MICROCOMPUTER NEWSLETTER

JANUARY 1988 VOLUME 4, NUMBER 3

CONTENTS

The *Microcomputer Newsletter* is published monthly by the Microcomputer and Workstation Systems Group, a part of the University of Minnesota's Academic Computing Services and Systems department (ACSS), with funds provided by the Minnesota Book Center. The University of Minnesota is committed to the policy that all persons should have equal access to its programs, facilities, and employment without regard to race, religion, color, sex, national origin, handicap, age, veteran status, or sexual orientation.

The *Microcomputer Newsletter* was produced on an Apple Macintosh II running MacWrite, Word, FullPaint, MacDraw, and PageMaker software; additional pictures from HyperCard. Camera-ready copy was printed on an Apple LaserWriter Plus.

Direct comments and subscription cancellations, changes, and additions to the editors at the address on the closing page. Subscriptions are free. Permission to copy for noncommercial purposes is granted, provided proper acknowledgment is given; the editors request a copy of the document or record in which our material appears.

IBM OS/2

OPERATING SYSTEM

Overview

In December, 1987 IBM began shipping version 1.0 of the Standard Edition of their OS/2 Operating System. OS/2 brings many of the features of mainframe operating systems to the desktop computer. In this article we will review the major features of OS/2.

OS/2 is a true multitasking operating system that has the potential to allow applications to (theoretically) address up to 1 gigabyte of memory. We expect most existing DOS applications to be compatible with OS/2. A future release of OS/2 (version 1.1 scheduled for shipment in October 1988) will include a graphical presentation manager. Since August, several Micro Group staff have been using a pre-release version of OS/2. They are excited about the potential of OS/2's features and performance.

Hardware Requirements

In order to run OS/2, you must have a computer based on the 80286 or 80386 central processing unit (CPU). Computers with an 8088 or 8086 CPU will not run OS/2. A common misconception is that in order to run OS/2 you must have a computer with the microchannel architecture; that is, IBM Personal System/2 models 50, 60, or 80. *OS/2 does not require the microchannel bus*; it does require an 80286 or 80386 CPU. The table below shows which IBM personal computers will and will not run OS/2.

Which IBM personal computers will run OS/2?

Will run OS/2 (80286/80386 CPUs)	Will *not* run OS/2 (8086/8088 CPUs)
IBM XT-286	IBM PC
IBM AT	IBM XT
PS/2 model 50	Convertible
PS/2 model 60	PS/2 model 25
PS/2 model 80	PS/2 model 30

IBM OS/2 *CONTINUED ON* ..... *PAGE 24*

You will need a hard disk and a minimum of 2 megabytes of RAM to run the OS/2 Standard Editions and 3 megabytes (MB) to run the Extended Editions. Currently, OS/2 takes up 3 MB on your hard disk, and you should have at least a 20 MB hard disk to run OS/2 applications.

You don't need graphics capability to run versions 1.0 of OS/2. However, the OS/2 versions 1.1 will require this capability; this means you may need to add a graphics adapter and monitor to your system. OS/2 will include support for IBM's EGA, VGA, and 8514/A graphics adapters; but IBM does not plan to support the Professional Graphics Adapter. We expect to see third party support for other graphics products. For example, Hercules is developing a driver to run the OS/2 versions 1.1 on the Hercules Graphics cards.

OS/2 Versions

IBM announced four versions of OS/2: the Standard Edition versions 1.0 and 1.1 and Extended Edition versions 1.0 and 1.1.

The Extended Edition adds Structural Query Language (SQL) Database and Communications support to the Standard Edition. For both Standard and Extended Editions, version 1.0 has a text based program selector and version 1.1 will have the Graphical Presentation Manager (discussed below). If you buy version 1.0 of either OS/2 edition, the upgrade to version 1.1 is free. The editions' features and release dates are shown in the table below. The University's price for upgrading to OS/2 or buying OS/2 is covered in the *Cost* section at the end of this article.

Edition	Version	User Interface	Release Date
OS/2 Standard	1.0	Program Selector	December 1987
OS/2 Standard	1.1	Graphical	October 1988
OS/2 Extended	1.0	Program Selector	July 1988
OS/2 Extended	1.1	Graphical	November 1988

As with DOS there are two versions of OS/2 *Standard* Edition: the IBM version and the Microsoft version. The Standard Editions were jointly developed by IBM and Microsoft. The Extended Edition is only offered by IBM.

MultiTasking

OS/2 has multitasking capabilities; this capability lets you run several programs at the same time. While you are working in one application, your other OS/2 applications continue to run in the background. OS/2 will let you switch from one application to another at any time. For example, you could work with your favorite word processing software while sending or receiving data over a communications line or while a spreadsheet is recalculating in the background.

In OS/2, you can run up to 12 concurrent sessions; IBM calls these sessions Screen Groups and so will we. At any time, one Screen Group is active and the other Screen Groups are in the background. A Screen Group fills the entire display, so you do not see the sessions that are running in the background. You use a hot-key combination (see *Using OS/2* below) to bring a Screen Group from the background to the foreground, i.e., into view on your monitor.

OS/2 also allows multitasking within a single application. Any OS/2 application can be made up of several "threads" that can operate concurrently. You can think of a thread as an independent task within a program. A thread can pass data to and from other threads, can synchronize its execution with the execution of other threads, and can create other threads. OS/2 supports up to 255 threads running concurrently.

OS/2 will allow complex programs to be broken down into simpler units (threads) which are dedicated to a specific task. Because of this ability, we expect OS/2 applications that will emerge in the next few years will be much more powerful than current applications, i.e. than those written for DOS. We can easily imagine applications that will be able to concurrently read data from keyboard, network and lab equipment, process that data, and present up-to-the-minute results on the screen.

Memory

OS/2 will address up to 16 megabytes of physical memory and up to 1 gigabyte of virtual memory. In contrast, DOS applications can address 640K.

Physical memory is the Random Access Memory (RAM) that is in your system. Virtual memory is equal to the physical memory plus the available storage space on a hard disk or other mass storage device. When the amount of memory required by a program exceeds the available RAM, OS/2 makes additional memory available to the application by swapping part of the memory that is not immediately required to the hard disk. This virtual memory technique has been used on large computer operating systems (such as UNIX and VMS) for years. In this sense, OS/2 is a hybrid of a traditional microcomputer operating system and a large computer operating system.

Under a virtual memory system, the amount of memory available to your programs is equal to the sum of your system RAM and the available space on your hard disk. (Users who require huge amounts of memory should note: the present release of OS/2 has a 32 MB file size limit, so the maximum amount of virtual memory is 48 MB. Removal of the 32 MB file size limit has been announced as a planned future enhancement for OS/2.)

Graphical Presentation Manager

The initial release of both editions of OS/2 is like DOS in that it is text-based. Future releases will include the Graphical Presentation Manager. The Presentation Manager is based on Microsoft Windows and has a user interface similar to the

Apple Macintosh with overlapping windows, icons, and mouse support.

The Presentation Manager will run as one session and can run multiple applications concurrently in separate windows. You will be able to have other programs that do not use the Presentation Manager running in the other 11 Screen Groups. (You can run up to 12 concurrent sessions in OS/2.)

DOS Compatibility

To make the transition from DOS to OS/2 you can use the *DOS Compatibility Box*. This Compatibility Box is a software emulation of DOS 3.3 that allows most existing DOS programs to run as a session under OS/2. The Compatibility Box occupies one Screen Group in OS/2. To test Compatibility Box performance against DOS 3.3 performance, we ran three benchmarks on an IBM PS/2 Model 60. Two are benchmarks we have used before: our Lotus 1-2-3 version 2 and dBASE III Plus benchmarks. For the third benchmark we used the *Computing Index* feature of the Norton Utilities software package. For our readers who are unfamiliar with our benchmarks, we offer the following brief description:

> In our March 1986, February 1987, and May 1987 newsletters we published the results of previous benchmarks. Performance benchmarks are designed to test one aspect of the computer, such as the Central Processing Unit's (CPU) speed. We used dBASE and Lotus for our benchmarks because our goal is to simulate applications that actually exist in many office environments. Our database management (dBASE) benchmark tests each system's disk input/output (I/O) speed. Our spreadsheet (Lotus) benchmark is primarily a CPU speed test.

Here are our results: the Lotus 1-2-3 recalculation was 2% slower in the Compatibility Box, but a dBASE III indexing of 1000 records was 19% faster in the Compatibility Box. The Norton Utilities benchmark we ran using the *Computing Index* feature (referenced to an IBM XT = 1.0) was 9.5 for the Compatibility Box and 9.8 for DOS 3.3.

DOS programs that are time-critical will not run in the Compatibility Box. These time-critical DOS programs include network programs, communications programs, and software that employs some copy-protection schemes. If you must run network or communications software, you will need to buy an OS/2 version of the program or reboot your system from a DOS 3.x (versions 3.0 to 3.3) floppy disk. Programs running in the DOS Compatibility Box cannot use Extended Memory and do not take advantage of OS/2 features.

When a DOS task is in the foreground (when you're working on a DOS task), your OS/2 tasks will continue to run in the background. However, when you put your DOS task in the background, its operation is suspended until you bring it back to the foreground.

Installation

Installation of OS/2 is a straightforward process. A menu-driven program handles all of the details of installing OS/2 onto your hard disk. You will be asked a few questions, such as what kind of mouse (if any) you will be using and whether or not you want to include the DOS Compatibility Box. Once you've answered the questions, the installation program copies all of the appropriate files from the floppy disks to your hard disk. You will be instructed when to switch disks and when to reboot your system. If you have DOS 3.x on your hard disk, you do not need to reformat the hard disk. However, it is always a good practice to back up the contents of your hard disk before installing a new operating system.

OS/2 Standard Edition version 1.0 comes on 4 disks: one installation disk and three system disks. After backing up your hard disk, place the installation disk in the "A" drive, reboot the system, and follow the instructions in the menu. Once OS/2 is installed, your computer will automatically boot OS/2 from the hard disk. If you need to run DOS 3.x to use a program that is not OS/2 compatible, you can boot your system from a DOS 3.x floppy disk.

Using OS/2

There are many similarities between DOS and OS/2 that will make the transition to OS/2 easy for those who are familiar with DOS. OS/2 has the same commands as DOS, such as `DIR`, `COPY`, and `ERASE`. OS/2 uses the same file system as DOS, so you can use whatever files you created with DOS in OS/2 (and vice versa). Files for DOS programs and for OS/2 programs can both be on the same disk.

When you boot the Standard Edition version 1.0 of OS/2, you will be shown a *Program Selector*. The right side of the screen shows programs that are currently running, and the left side of the screen shows a partial list of the programs you can start running. You use the arrow keys or a mouse to select the program you want to run in the foreground. You can customize the Program Selector to include any of your favorite programs in the menu of choices. Once these programs have been added to the menu, you can run these programs from the Program Selector menu rather than from the command line prompt.

The Program Selector option that lets you run OS/2 programs from the command line prompt (just as you do in DOS) is called the *OS/2 Command Prompt*. The *DOS Command Prompt* option allows you to run a DOS program under OS/2 in the Compatibility Box.

In OS/2 the command prompt changes depending on what task you're running. For an OS/2 task the prompt is `C:]`. For a DOS Compatibility Box task the prompt is `C:REAL>`.

As in DOS, OS/2 has a file called `CONFIG.SYS` that the system uses at boot time to configure various options. OS/2 has several new options that go in the `CONFIG.SYS` file to control multitasking and memory management. You can use

these options to fine tune your system or use OS/2's default values.

OS/2 Batch files are different than DOS; they end with the extension `.CMD` instead of `.BAT`. The OS/2 equivalent to the DOS `AUTOEXEC.BAT` file is a file called `STARTUP.CMD`. When you are running OS/2, you cannot run a `.BAT` file unless you are in the DOS Compatibility Box. Likewise, when you are in the DOS Compatibility Box you cannot run a `.CMD` file.

You can return to the Program Selector from an application at any time by using a *hot key*, that is pressing the `<Ctrl>` and `<Esc>` keys simultaneously. From the Program Selector you can start another task or move a task from the background to the foreground. You can switch from one task to another without going through the Program Selector. Any time you press the `<Alt>` and `<Esc>` keys simultaneously, you can switch from one task to another in round robin fashion.

Cost

Both the Book Center in Williamson Hall and the University's Purchasing Department will order IBM's OS/2 Standard Edition version 1.0. (Please note: at the University only departments can place orders with the Purchasing Department.) Here are the University's prices:

University OS/2 Discount Prices

Departments	
Purchasing Department	$ 146.25
Williamson Book Center	$ 153.00
Individuals: (faculty, staff, and students)	
Williamson Book Center	$ 234.00*

* IBM is making a Transitional Offering of OS/2 Standard Edition version 1.0 to current owners of PC-DOS version 3.0 through 3.3 for $200. This offer is only good through June 30, 1988. In order to take advantage of this offer, you need an order form and must enclose the original title page of your PC-DOS 3.x manual; the order forms are available from the Micro HelpLine. *You must mail your order form and title page directly to IBM.*

If you buy version 1.0 of the OS/2 Standard or Extended Editions, then the upgrade to version 1.1 is free.

Evaluation

From our limited experience with OS/2, we are impressed with the operating system's performance and features. OS/2 is designed to accommodate future growth and offers a better platform than PC-DOS for a new generation of software. Multitasking and the ability to handle large amounts of memory are going to result in the development of programs that were not feasible under PC-DOS. OS/2's DOS Compatibility Box provides a transition path from DOS to OS/2. However, the major benefits from OS/2 will not be realized until the Presentation Manager is available and applications are developed to take advantage of the OS/2 features.

In the next few months we expect to see OS/2 versions of many current DOS programs, such as R-Base and Paradox. Most of these first releases will merely be rewrites of the DOS versions to run as OS/2 tasks; these releases will not take advantage of the OS/2 features. Later in 1988/1989 we expect to see applications that will fully exploit the capabilities of OS/2.

When should you make the switch from DOS to OS/2? That depends on your needs. For most users there will be no benefit to switching to OS/2 until the Presentation Manager is available and applications are developed to take advantage of the OS/2 features. If you are writing your own applications and are limited by the 640K DOS memory limit or could benefit from multitasking in your applications, then you may want to consider converting to OS/2 immediately.

BEGINNERS' NOTEBOOK: BACKUP YOUR DISKS!

Few things are more frustrating than losing days or weeks of work when your only copy of a disk is lost or destroyed. Save yourself an anguished call to the Micro HelpLine. By taking a few simple precautions, you can protect the most important part of your microcomputer system: the work you have done with it.

Data loss is not a matter of if.
Data loss is a matter of when.

How Disks Fail

A floppy disk is a thin, circular, fragile plastic disk, housed in a protective shell; that shell may be flexible or hard. Your computer's disk drive uses a magnetic field to write information to the disk. Because information is stored on the disk by magnetizing small sections of the disk, strong magnetics fields can easily erase this information. This means if a disk comes in contact with *anything magnetic*, the information on the disk can be erased or scrambled.

Some sources of magnetic fields are obvious, such as the small household magnets used to post messages on refrigerator doors. Other magnetic fields are less obvious but equally dangerous when placed near floppy disks. These magnetic sources include electrical motors, such as those contained in small desk-top fans, electric pencil sharpeners, or children's toys. Your telephone produces a magnetic field when it rings, and nearly all speakers contain magnets. Some purses have magnetic closures. Computer monitors also produce magnetic fields when operating; don't throw your disks on top of your monitor. Wise and cautious micro users store their disks at least 2 feet away from anything that produces a magnetic field.

The information on your disk can also be destroyed while you are working. This can happen if there is a sudden surge in electrical power to your computer or if your computer is accidently disconnected from its power source.

Temperature extremes can also damage floppy diskettes: the plastic diskette may be damaged at high or low temperatures. So it is unwise to leave your disks in a hot car in the summer or a cold car in the winter.

You can ruin your disk if you touch the surface of the diskette that is exposed through the oval cut-out in the disk's protective shell. The oil and perspiration on your fingers will destroy this fragile material. Dust and other air-borne contaminants (such as cigarette smoke) also damage disk media. Store your floppy disks in a protective case when not in use.

Handle disks carefully. Never throw them around or place heavy books on top of them. Carry flexible floppy disks, such as 5 1/4" disks, in a cardboard or plastic container to avoid bending them. You cannot toss disks in you backpack and expect them to give you good service.

When a Disk Fails, Use Its Backup

Unfortunately, despite your best efforts to protect them, *all of your disks will go bad eventually*. You should plan for that sad day. We recommend that you make backup copies of all your important disks after each 15–20 minutes of work. In fact, it is wise to have backups of important files on two or more different disks that are stored in different locations. Then if a disaster (such as fire or theft) occurs at one location, you will have a backup copy of your work elsewhere.

Recovering Information

By making backup copies of your work, you will protect the information stored on your disks from accidental loss. If your disk fails and you do not have a backup disk, kick yourself; you have made *a big mistake*.

We *may* be able to help you recover the information from your disk in certain *limited situations*. However, disk recovery is a tricky, time-consuming, expensive process whose outcome is unpredictable. Our HelpLine consultants are only able to restore disks about 25% of the time with the use of specialized systems software.

No one can salvage information from a disk which has been chewed up by the dog or left to melt in a hot car. However, assuming that your disk is still physically intact, we may be able to help you recover lost information. If you need our disk salvage service, bring your damaged disk into the Microcomputer HelpLine during regular HelpLine hours; speak with a consultant and fill out a request form. Be aware that we are very busy, so you must allow *a minimum of five working days* for us to *begin evaluation* of your problem. The charge for our disk recovery service is $35 per hour with a minimum charge of $70 for each disk we examine.

Prior to our evaluation of your individual problem, we cannot estimate how long the disk recovery process will take; but you may specify a time limit in advance so that you do not incur more charges than you are prepared to pay. The minimum charge is $70 for each disk we examine, regardless of whether or not we recover your information; and we do not guarantee recovery. We do guarantee that we will try our best.

Other groups also attempt recovery of trashed disks. You may want to contact local computer retailers who provide disk recovery service. One service that we know of is Dan Patch Micro Systems (894-1683).

If you want to try recovering the information from a bad disk yourself, there are several utility programs available. However, these programs are not cheap (typically they cost $50–100), and to use them you must already have an expert-level understanding of the internals of your computer's operating system.

Clearly, it is best to avoid the expense and frustration of losing vital information by frequently copying important information onto other disks. *If you do not take the responsibility to make backup copies of your work, it is likely that you will lose your work and no one will be able to recover it.*

TUTORIAL: APPLETALK NETWORKS

We've seen a growing interest in networking among Macintosh users at the University. We see several reasons for this increased interest: the growth of the University's campus-wide backbone network, the increasing availability of Mac software designed for use with networks, and Apple Computer's relatively inexpensive and user-friendly solution for building local area networks.

Apple's network solution is called AppleTalk. An AppleTalk local area network (LAN) can interconnect Apple computers, Apple peripherals, and IBM PCs and PC-compatibles. This tutorial will provide you with the information you need to know if you decide to install an AppleTalk LAN at your work site. We will concentrate primarily on what is involved in wiring an AppleTalk network. Before we can cover how to wire an AppleTalk network, we must look at some basic network concepts: what an AppleTalk local area network is, and what you can gain by connecting your office microcomputers and peripheral devices with an AppleTalk LAN.

What is a Network?

A network is a system of hardware and software components which work together to allow computers and peripheral devices (such as modems, printers, and file servers) to communicate with each other. Network *hardware* consists of the cables,

connectors, and other physical media which allow the information to pass from one computer or device to another. Network *software* is a set of instructions which control the transfer of information between the physical components of the network. For computers and other devices to communicate across a network, they must talk the same language; that is, they must use the same network software protocol. A *network protocol* is a set of rules governing how information is transferred over the network. There are a variety of network hardware and software solutions available today. In this article we concentrate on the AppleTalk network.

Apple designed its AppleTalk network protocols so that a variety of physical media can be used to create a network that runs the AppleTalk network protocols. Although the physical media may be different, the AppleTalk network protocols were designed so you can run exactly the same software over an AppleTalk network independent of the wires used to create the network. So, there are several ways you can wire a network for use with the AppleTalk network protocols. You can choose among cables and connectors made by several manufacturers. There are also several ways to arrange this hardware to wire the AppleTalk cabling for the layout of your particular office or laboratory.

Why Install an AppleTalk LAN?

Perhaps the best reason to install a LAN is that a network allows you and others on the network to share hardware devices. For example, you might have 15 Macs at your work site. While it is not cost-effective for each user to have their own $3000 LaserWriter printer, all users can have access to high-quality printing by sharing a LaserWriter across the LAN.

You can also use a LAN to transfer documents and share software within your work group. Before networks, sharing meant that you had to copy your information to a floppy disk and deliver the disk to the person with whom you wanted to share the information. An easier approach is to have a shared hard disk that is accessible to all users over the local area network. The shared hard disk may contain software and documents of general interest to all the users on the LAN (subject to the restrictions of the individual software license agreements). For example, multiple users can simultaneously access and modify an office schedule provided by the multi-user version of *FrontDesk*. The shared hard disk may also be used to store a library of clip art, standard office forms, a folder containing the minutes of staff meetings, and so on.

To share information in this way you need a shared hard disk; this is provided by file server software. The AppleShare file server software runs on a Macintosh with one or more hard disks. This Mac is a dedicated machine; its sole function is to act as a file server. (See our August 1987 newsletter for details about AppleShare software.)

You can also use an AppleTalk LAN to send and receive electronic mail among Macintoshes at your work site. Several vendors sell electronic mail software designed for use on an AppleTalk LAN. Two examples are *InterMail* by Interactive Network Technologies and *InBox* by Think Technologies. The Microcomputer HelpLine has these programs on order, and they will be reviewed in an upcoming issue of our newsletter.

What About the Rest of the Campus?

While a LAN provides you with high-speed access to resources inside your work group, you may sometimes need access to computing resources located elsewhere at the University. To access these resources outside your work group, you need a bridge to connect AppleTalk to the University's Ethernet backbone network. You can use this bridge instead of a modem to gain simultaneous access to computing resources for all computers on the LAN.

There are several reasons why connecting your LAN to the campus-wide network may provide you with better service than you could get using modems. For many people the reason is money. If your LAN has many users, it may be more cost-effective to use the campus-wide network than to pay monthly telephone access fees for each individual user. In addition, connecting a LAN to the campus-wide network is faster than using modems because you can get much higher data transmission rates (that is, speeds vastly faster than 9600 baud).

Other important advantages of connecting to the campus-wide network include:

✔ Access to computers outside your local network. The campus-wide network allows you access to hundreds of other campus computers and access to thousands of computers on networks at other universities throughout the world. This means that you could establish an account on a campus mainframe or supercomputer and use your Mac as a VT-100 or a Tektronix 4014 terminal to access the larger computer. This process is called a virtual terminal session. Using the public domain software *NCSA Telnet*, you can obtain simultaneous high-speed terminal access to as many as six other computers on the network. As long as the other computers are connected to the campus-wide Ethernet network, you can exchange information with that computer. (Of course, you need an account on that computer.)

✔ Once you have established a virtual terminal session with a campus mainframe, you can use its electronic mail program to send and receive mail with other users on the campus-wide network or on other networks, such as BITNET which is a nation-wide educational network. Contact your local campus computer center for more information on electronic mail services.

✔ You can use the campus-wide network to gain access to the Macintosh Information Server, the new on-line information service which we announced in our November, 1987 newsletter. This server lets users access information stored on the

server from any Mac on campus, providing the Mac is connected to the campus-wide network. (See the *Mac Information Server and AppleTalk Internet* article in our December, 1987 newsletter.)

How About Intra-Building Connections?

You can use Ethernet (such as the campus-wide network) to connect multiple AppleTalk LANs together. In this way you can link your department's local area networks even if the LANs are located in more than one building. This is an excellent way to share devices such as laser printers and file servers among different locations.

Even departments located entirely within one building may find it useful to organize their computers and devices into multiple local area networks. LANs have performance limitations: if the amount of traffic on a LAN exceeds certain levels, network processes will slow down. In addition, all AppleTalk LAN wiring options have limits to the number of devices the LAN can support. You can overcome these limitations by separating a large LAN into smaller LANs and using the campus-wide network as a high-speed link (internet) between them.

For more information about using the campus-wide network to connect several AppleTalk networks together, refer to the Kinetics FastPath gateway review in our July, 1987 newsletter.

How Do I Install an AppleTalk LAN?

An AppleTalk LAN includes both hardware and software components. Installing AppleTalk network software is an uncomplicated process because the basic AppleTalk software is already part of the Macintosh operating system. However, if you want to add a file server, a LaserWriter printer, or some other device to the LAN, you must install additional network software into the system folder on your start-up disk. Sometimes you must purchase this network software separately.

Installing AppleTalk network hardware is also fairly uncomplicated. In order for *any device* to connect to an AppleTalk local area network, the device must contain an AppleTalk network port. All Macs and all Apple LaserWriter printers come with this port already installed. Other Apple microcomputers and peripheral devices such as the Apple II and the Imagewriter II and LQ do not contain this port. To connect these devices to an AppleTalk network, you must purchase an expansion card containing an AppleTalk network port; this card is also available for IBM PCs and PC-compatibles.

Once all your devices have AppleTalk network ports, you are ready to connect them in an AppleTalk LAN. The two most popular manufactures for AppleTalk LAN hardware are Apple Computer and Farallon Computing. We have had extensive experience with these products, and they are available through the Microcomputer Discount Program.

Let's take a detailed look at how you can wire an AppleTalk network. You have several options for connecting a group of micros and devices together; these options are called topologies. The major AppleTalk networking topologies are: daisy chain, trunk, and star.

You choose a specific topology arrangement or combinations of the above based on many issues and considerations; these issues will become apparent as you read on.

Apple's Wiring Options

With Apple's wiring hardware, you are limited to 1000 running feet of AppleTalk cable per LAN, and you have only one LAN topology option: the daisy chain. There are further limitations to consider. A daisy chain LAN is usually considered appropriate for networking a few devices in the same room, and Apple recommends that you do not use their wiring hardware to build a LAN with more than 32 devices.

As the name implies, devices in a daisy chain network are connected in a chain or series. If any connector along the chain becomes disconnected, this break separates the network into two pieces. These pieces cannot communicate with each other. Disconnections are less of a problem with more sophisticated topologies, such as the trunk or star. These topologies are possible if you use the Farallon PhoneNET products (described later in this article).

It is easy to build an AppleTalk LAN. The required hardware components come in three kits: two connector kits and one optional wiring kit. Connector kits contain three items: an AppleTalk Connector with your choice of either a D-9 plug (also known as a DE-9 or DB-9) or a mini-DIN-8 plug; a 3-meter AppleTalk cable; and an AppleTalk Extension Module. The AppleTalk connector is really an isolation transformer; it allows you to disconnect a device from an active AppleTalk LAN without disrupting the traffic on the network.

The optional wiring kit (M2055) contains two parts: one AppleTalk Extension Module and one AppleTalk 10-meter cable. The 10-meter cable functions as an extension cord for spanning distances larger than 3 meters. Kit M2055 contains the two parts shown below.

Kit M2055

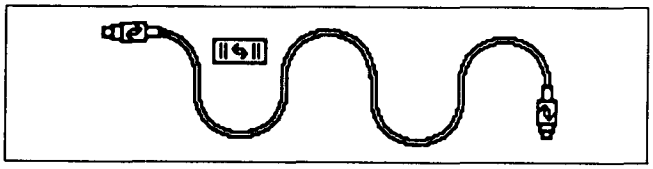

Kit M2053 (an AppleTalk connector with a D-9 plug) contains the three parts shown below.

Kit M2053

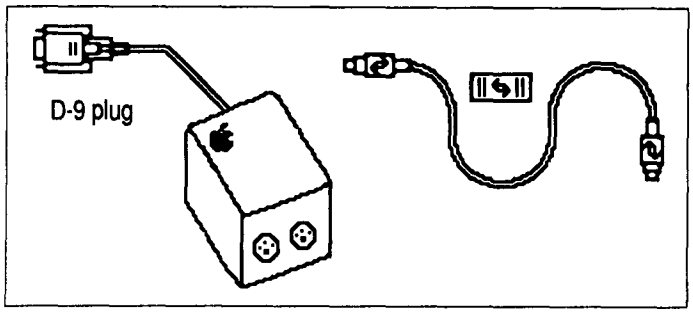

Kit M2054 (an AppleTalk connector with a mini-DIN-8 plug) contains the three parts shown below.

Kit M2054

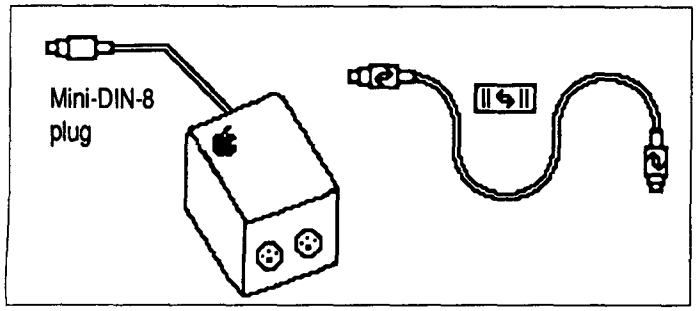

To assemble an AppleTalk daisy chain, you plug one component into another according to the instructions included with the kits. Each computer or peripheral device *requires its own AppleTalk connector kit.* This means if you have a network consisting of two Macs and one LaserWriter, you must buy three kits. You select a connector kit for each device you wish to connect to the LAN based upon whether the device requires a D-9 or mini-DIN-8 plug. (The plug type must match the type of plug receptacle on the device's AppleTalk network port.)

The daisy chain topology diagram below uses Apple Computer's networking hardware:

TOPOLOGY: DAISY CHAIN

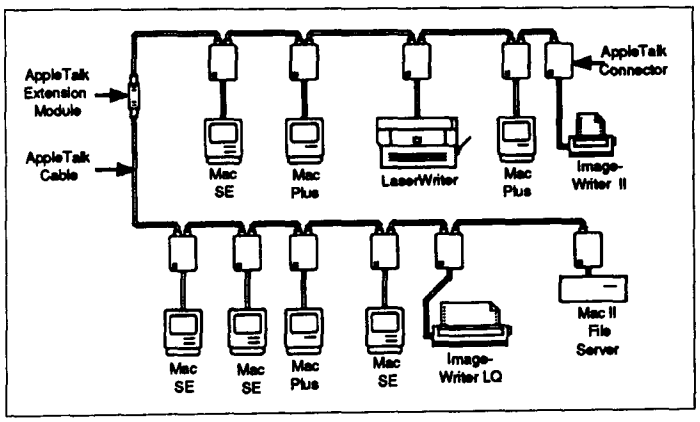

PhoneNET's Wiring Options

PhoneNET hardware components allow you more flexibility when building your LAN. While Apple's wiring hardware restricts you to the daisy chain topology, you can choose other topologies with the PhoneNET AppleTalk hardware.

Along with increased flexibility, PhoneNET hardware offers a cost advantage; it uses standard telephone parts available at any Phone Store, such as wall cable, modular extension cables, wall jacks, and modular cable extenders. (Many of these standard phone parts are also available at the Book Center in Williamson Hall.) PhoneNET hardware is more flexible than Apple's hardware in another important aspect: PhoneNET systems can operate through 4000 feet of standard 22-gauge telephone cable. (An AppleTalk LAN constructed with Apple's hardware is limited to a total of 1000 feet of AppleTalk cable.) This is an important consideration for those who must interconnect devices over large areas. In fact, if you purchase an optional amplifier (the star controller described later in this article), you can build a LAN which can accommodate up to 40,000 feet of telephone wire.

PhoneNET Topology Options

Using the PhoneNET system, you may choose among several wiring options for your AppleTalk LAN. The best topology for you depends on how many devices you plan to connect and the geographic layout of your work site. The PhoneNET topologies are the daisy chain, the trunk, the star, or combinations of the above.

• Daisy Chain

You may construct a daisy chain topology using PhoneNET AppleTalk hardware in the same manner described above with Apple hardware. The PhoneNET hardware kits are also similar to those manufactured by Apple.

Kit PN208 comes with a 7-foot modular extension cable with RJ-11 plugs on each end plus a PhoneNET Connector (isolation transformer) with a mini-DIN-8 plug on the end.

Kit PN208

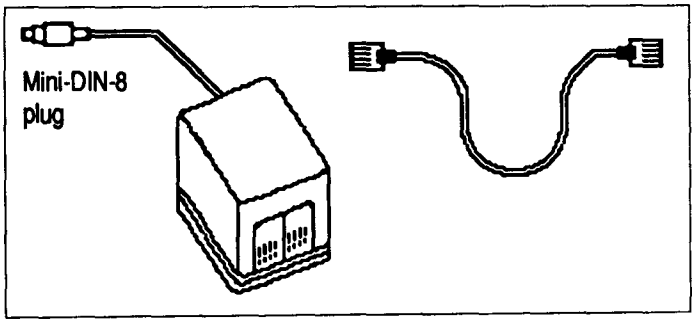

Kit PN209 comes with a 7-foot modular extension cable with RJ-11 plugs on each end plus a PhoneNET Connector (isolation transformer) with a D-9 plug on the end.

Kit PN209

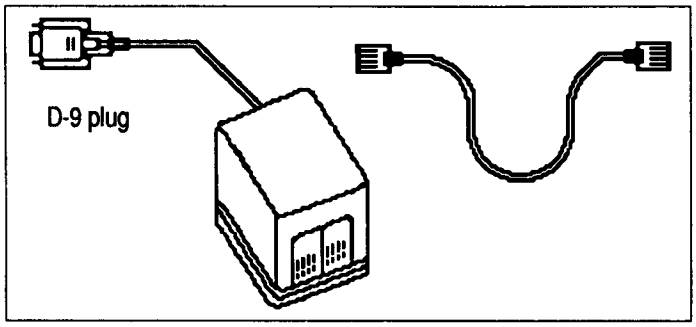

As with Apple's hardware, installation is simply a matter of plugging one component into another according to the instructions included with the kits. Each computer or peripheral device requires its own PhoneNET connector kit. You select a connector kit for each device you wish to connect to the LAN based upon whether the device requires a D-9 or mini-DIN-8 plug. The plug type must match the type of plug receptacle built into the device's AppleTalk network port.

• **Trunk**

The trunk topology is suitable for connecting devices over extended distances. With a trunk, you can build large multi-office AppleTalk LANs. Unlike the daisy chain, users can disconnect from the LAN without splitting the network into separate pieces. Think of the trunk as one long cable with branches attached here and there along its length. The total length of a trunk can be up to 4000 feet using standard 22-gauge round telephone wire.

In addition to the connector kits described above (one required for each device on the LAN), you will need to purchase inexpensive, standard bulk 22-gauge round telephone wire; this wire is available at the Book Center in Williamson Hall in 100 or 1000-foot lengths.

You also need to buy one standard telephone RJ-11 modular wall jack for each branch connected to the trunk. An RJ-11 wall jack is pictured below.

RJ-11 Wall Jack

A branch off the trunk may have one or more devices attached to its RJ-11 wall jack; you can connect either a single device to the wall jack or you may connect a daisy chain to the jack. If you connect a daisy chain, you construct a combination topology. (In this case, the daisy chain is best limited to a maximum of 20 devices.) Below is a simple trunk topology diagram.

TOPOLOGY: TRUNK

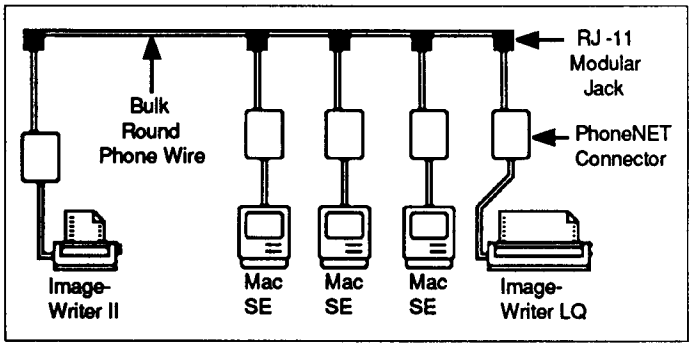

The next diagram is an example of a trunk with a daisy chain branch. Note that one RJ-11 wall jack is required for each branch off the trunk, including the branch which connects the daisy chain (on the bottom half of the diagram) to the trunk. Also note that this AppleTalk LAN is connected to the campus-wide Ethernet backbone network, since it has a Kinetics FastPath gateway to the campus-wide network through the telephone system's LANmark Ethernet service. (Contact Telecommunications for information about a LANmark Ethernet.) The Kinetics gateway translates AppleTalk network protocol into Ethernet TCP/IP protocol (the language of the campus-wide backbone network) and vice versa.

TOPOLOGY: TRUNK WITH DAISY CHAIN

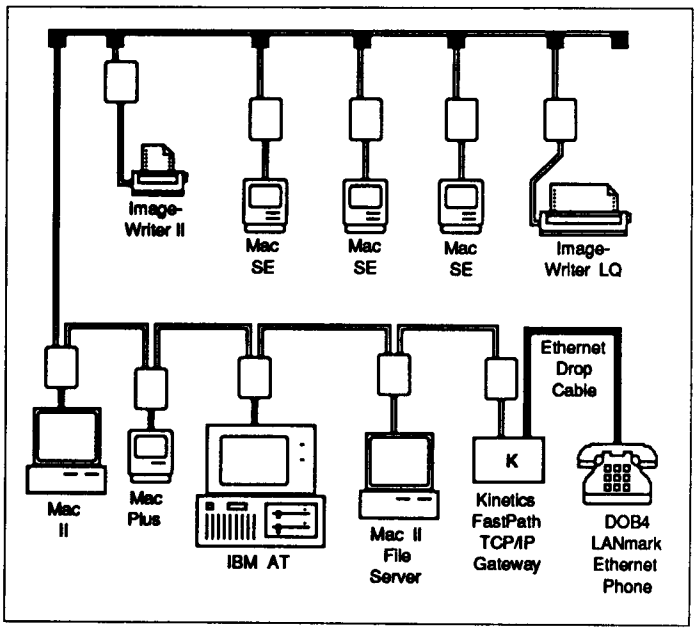

• STAR

A star topology consists of trunks which are joined at a central location (the star hub). These trunks can be simple or more complex, such as the trunk with daisy chain shown above. The main advantage of the star is that the wiring control resides at one central point, the hub. This centralized control allows for easy modification of the LAN. There are two kinds of star hubs: passive and active.

With the passive star hub, the star topology can accommodate up to four trunks. The trunks plug into the central passive star hub. This hub contains a PhoneNET *punch-down block*. You connect the trunk wire to the punch-down block by pushing the end of the wire into the block's openings. A diagram of a PhoneNET passive star hub is below.

PASSIVE STAR HUB

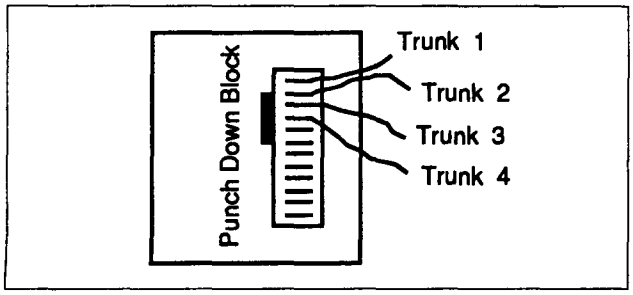

The active star hub contains the same punch-down block as the passive hub as well as an amplifier (called the Star Controller) which plugs into the side of the punch-down block. With the active star hub, the star LAN topology can accommodate up to 48 trunks and roughly 40,000 total feet of wire.

The star topology is the most flexible topology; it can grow to accommodate the changing demands of your work site. Below is a diagram of an active PhoneNET star hub:

ACTIVE STAR HUB

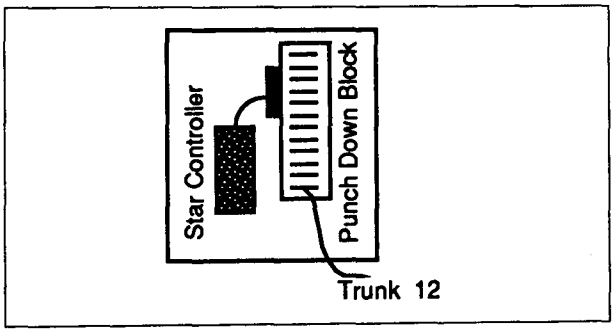

The star topology diagram to the right is an example of an AppleTalk local area network wired in a star configuration; this diagram has four branches:

TOPOLOGY: STAR

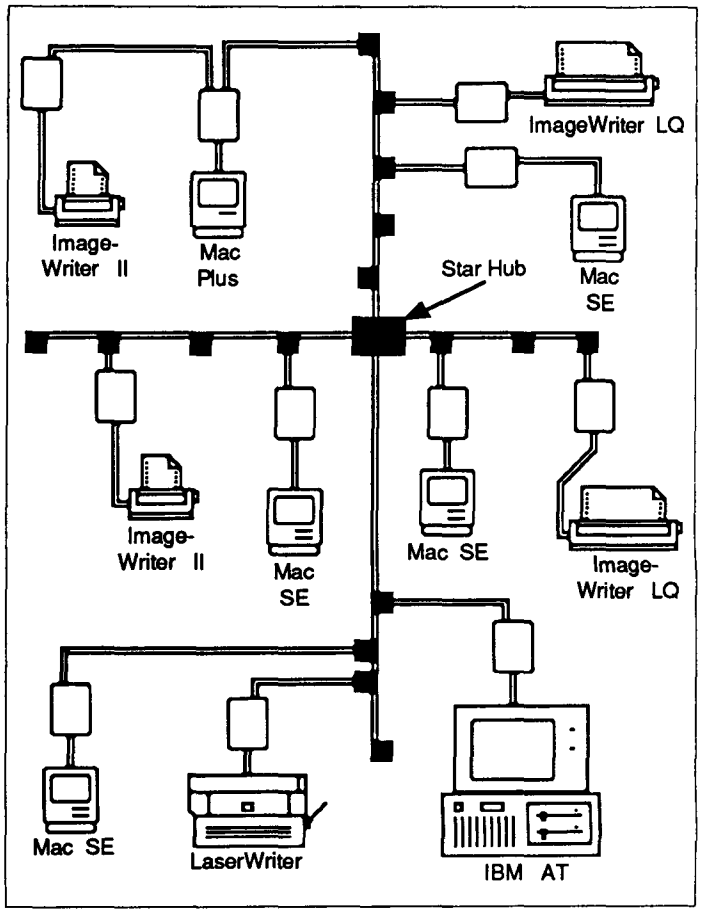

Where Can I Get More Help?

For further information about planning or wiring an AppleTalk LAN, call 626-4276 or visit the Micro HelpLine in 125 Shepherd Labs during regular HelpLine hours. One of our consultants would be happy to advise you. If you need help in installing an AppleTalk LAN at your work site, contact ACSS Engineering Services at 627-4177.

Book Center Discount Prices

Apple		
M2050 *	AppleTalk Network port for IBM PC	$ 255
M2053	Connector kit: D-9 plug	49
M2054	Connector kit: mini-DIN-8 plug	49
M2055	Wiring kit: 10-meter	49
PhoneNET		
PN208	Connector kit: mini-DIN-8 plug	$ 38
PN209	Connector kit: D-9 plug	38
PN___	Punch-down block (with 2-foot cable)	65
PN207	Star Controller	1130
Other		
—	100 feet 22-gauge round phone wire	$ 60
—	RJ-11 modular wall jack	7

* requires AppleTalk Connector Kit M2054

SITE LICENSE FORUM

by Sandra Welch

The University of Minnesota currently holds several site-licenses and a number of volume discount agreements for microcomputer software. In order to make it easier for the University micro user to take advantage of these licenses and discounts, the Microcomputer Newsletter is providing this forum for people who:

1) want to participate in a site-license/volume discount package that the University presently holds;

2) want to find participants for a site-license/volume discount package they already hold;

3) have a potential site-license/volume discount package and want to survey the University community of users for interested participants.

To initiate this forum, we are including the following general description of currently held microcomputer software site-licenses and volume discount agreements:

Software marked with a * is only available to those who can pay for the package with a University budget number; that is, it is not available to individual faculty, staff, or students.

AUTOCAD

AutoCAD is a computer-aided design program for the IBM XT, AT, and PS/2 computers and compatibles. AutoCAD is the industry standard CAD software package and can be used for a wide range of drafting applications. The minimum system requirements are 512K RAM, a hard disk, and a graphics display. A mouse and a 8087 or 80287 co-processor are highly desirable.

GLIM (LAB VERSION)

GLIM (Generalized Linear Interactive Modelling) is a flexible, interactive, statistical analysis program developed by the GLIM Working Party of the Royal Statistical Society for the IBM personal computer and DEC VAX/MicroVax machines.

GLIM provides a framework for statistical analysis through the fitting of generalized linear models to data, although its uses are wider than this. For data exploration GLIM provides an extensive set of tools for manipulation and display, e.g. forming simple statistics, tabulation, sorting, displaying data graphically and numerically. GLIM can be used as a statistical modelling tool to specify and fit statistical models to data, assess goodness of fit and display the estimates and predicted values derived from the model. In addition, you can use GLIM as a sophisticated calculator to evaluate complex arithmetic expressions or as a general programming language to perform more extensive data manipulation.

IMSL *

Our IMSL site license includes the IMSL STAT/PC-LIBRARY and the IMSL MATH/PC-LIBRARY. Each library contains a set of FORTRAN subroutines which can be called by a FORTRAN program. The STAT library includes subroutines for basic statistics, regression and discriminant analysis, analysis of variance, nonparametric statistics and tests for goodness-of-fit, time series analysis, random number generation, and probability distribution functions and their inverses. The MATH library includes subroutines for differential equations and integration; Eigensystem analysis; error functions and gamma functions; interpolation, approximation, and smoothing; linear algebra equations; vector/matrix arithmetic and sorting; and zeros and extrema.

To use the IMSL libraries you must already have IBM Professional FORTRAN version 1.00, which requires an IBM (or compatible) with a minimum of 192K RAM, either two floppy drives or one floppy drive and one hard disk, and a math co-processor. The University does not have a site license for IBM Professional FORTRAN.

PROCOMM

A full-featured communications program that allows you to use your IBM or IBM-compatible microcomputer to communicate with other computers. University of Minnesota faculty, staff, and students can use ProComm on campus or in their personal residence. ProComm works with Hayes-compatible modems and can emulate these ten terminals: ANSI-BBS, IBM 3101, ADDS Viewpoint, Wyse 100, Lear Siegler ADM-3/5, Heath/Zenith 19, DEC VT-100, and VT-52, Televideo 910/920, and 925/950. PROCOMM is free to the University of Minnesota community. (See our October 1987 newsletter for details.)

SAS/PC *

Base SAS is an all-purpose data management, retrieval, and report-writing tool featuring a full-screen windowing facility. Current mainframe SAS users will find that the PC Base SAS system contains many of the same data step commands and non-computer-system dependent procedures described in the SAS User's Guide: Basics. The minimum requirements for SAS includes 512K RAM, a fixed disk with at least 10 megabytes of storage (20 MB is recommended), and PC-DOS version 2.0 or later. The base SAS product alone takes up over 4 MB of storage.

Use of base SAS and SAS/STAT is limited to academic studies and/or research and does not include any profit-making or commercial use. Faculty, staff, and registered students of the University of Minnesota may use these products.

SAS/STAT

SAS/STAT contains several procedures for statistical analysis. This release of SAS/STAT has procedures for analysis of variance, regression, factor analysis, discriminant analysis, and

categorical data analysis. This software takes about 1.5 megabytes of storage.

SPSS/PC *

SPSS/PC is a statistical package for IBM machines; it requires an IBM PC, XT, AT, or close compatible with at least a 10 megabyte hard disk and 384K RAM. *A 20 MB hard disk and a math co-processor are recommended.* The site license currently includes Graphics and Translate; it also includes Advanced Statistics (but not Tables) for an additional fee.

SYSTAT/PC *

SYSTAT is a statistical package for IBM and Macintosh machines. The IBM version requires an IBM PC, XT, or AT (or close compatible) with a minimum of 256K RAM and two floppy disk drives. SYSTAT for the Macintosh requires at least 512K of RAM and two disk drives, either single- or double-sided. Both versions use the same manual, but the Macintosh manual comes with a 14 page preface describing the installation procedure.

TINCAN

TinCan is communications software developed by Yale University for Macs. TinCan provides terminal emulation, and on some mainframes it also provides file transfer capability.

TI PERSONAL CONSULTANT PLUS *

TI Personal Consultant Plus Expert System Development Tools is a set of software utilities that enables you to develop an expert system. Included with this software is PC Scheme, which must be installed before you install Personal Consultant Plus. Personal Consultant Plus runs on the IBM XT, AT, and IBM-compatible personal computers, as well as on various Texas Instrument microcomputers. On an IBM-type it requires 640K RAM and at least 1.5 megabytes of working space on a hard disk.

An expert system is a software program which allows you to solve a complex reasoning task (such as medical diagnosis or financial analysis) that would normally require an expert (like a doctor or a banker). A rule-based expert system includes a knowledge base of facts about a particular area of interest, a set of rules which describe the logical relationships among facts in the knowledge base, and a program that processes the rules and information and makes inferences.

YTERM

YTERM is a communications software package developed by Yale University for IBM personal computers. YTERM provides terminal emulation, and on some mainframes it also provides file transfer capability.

For further questions or to participate in this forum, call Sandra Welch at 625-9091.

PROPOSED SITE LICENSES

MATLAB

We have had a request to survey users for interest in a site-license for MATLAB (matrix laboratory). The software is available as PC-MATLAB and MacMATLAB. MATLAB is an interactive program to help you with your scientific and engineering numeric calculations. It provides easy access to matrix software developed by the LINPACK and EISPACK projects.

Second generation MATLAB that runs on IBM and other MS-DOS compatible personal computers is called PC-MATLAB. The Macintosh version is called MacMATLAB. (A version called PRO-MATLAB also runs on larger computers like Sun Workstations.) MATLAB is entirely written in the C language and is a completely integrated system, including graphics, programmable macros, IEEE arithmetic, a fast interpreter, and many analytical commands. A graphics interface and a math co-processor are necessary to run this software.

If you are interested in MATLAB, call Sandra Welch at 625-9091.

MATLAB's basic data element is a matrix that does not require dimensioning; this allows you to solve many numerical problems in a fraction of the time it would take to write a program like Fortran, Basic, or C. Problem solutions are expressed in MATLAB almost exactly as they are written mathematically. Typical uses of MATLAB include general purpose numeric computation, algorithm prototyping, and solving the special purpose problems with matrix formulations that arise in disciplines like automatic control theory, statistics, and digital signal processing (time-series analysis).

NEWS AND ANNOUNCEMENTS

It's been a quiet month in microland. We don't have much to report for the January news section. The big news is covered in the front page review of IBM's OS/2 operating system. Here are the rest of the announcements.

● IBM Users' Group

The January IBM Users' Group will meet on Thursday, January 28th from 3–4:15 in Lind Hall, Room 305.

● EPSON PRINTERS

The wide-carriage, 9-pin Epson FX-286e and the standard-carriage, 24-pin LQ-850 are available in the Micro HelpLine for your inspection.

● MULTIFINDER DOCUMENTATION

We've added MultiFinder version 1.0 documentation to the information you can copy from the Macintosh Information Server (see MIS articles in our November and December 1987 newsletters). You'll find the documentation in the *Finder 6.0* folder within the *System Software* folder. You can copy a Microsoft Word or ASCII format version of the manual to your disk. The MS Word formatted documentation takes 537K of disk space. The manuals are grouped in three folders: MultiFinder, Utilities, and Update. Here's an overview of what you'll find in the MultiFinder manual.

Chapter 1, *Before You Begin*, tells you how to prepare your system for Background Printing, how to turn MultiFinder on, and how to turn it off.

Chapter 2, *A Sample Session*, shows you how to work with MultiFinder and switch between applications.

Chapter 3, *Background Printing*, explains background processing in general and tells how to print documents on a LaserWriter printer while you work in an application at the same time.

Chapter 4, *Some Technical Points About Memory*, tells you how you can manage the memory available for your applications (especially important if you have not expanded beyond the standard 1 megabyte).

Chapter 5, *The Set Startup Command*, covers the command you use to set your startup applications.

Appendix A, *Tips for Working With MultiFinder*, gives you some suggestions that may help you work with MultiFinder.

Appendix B, *Troubleshooting*, discusses problems you might encounter and suggests remedies.

● MAC INFORMATION SERVER UPDATE

Below is a list of information that was added to the Mac Information Server in late November and in December, 1987. You may recall that the Mac Information Server is an AppleShare file server that is accessible over the AppleTalk internet at the University. The Mac Information Server (MIS) contains a variety of public-domain software and information. Public access to the MIS is available at the microcomputer labs in 9 Folwell Hall, 14 Walter Library, and at the Microcomputer HelpLine. We plan to bring several other public access sites for the Mac Information server on-line over the next month.

Note: older information on the server is cleared from time to time to make room for new information.

Communications Folder

- ❑ Mac Telnet password tools
- ❑ NCSA Telnet 2.1 beta-test versions

Developers Folder

- ❑ Macintalk patched for the Mac II
- ❑ Macintosh Tech Notes: 20 new notes
- ❑ ResEdit manual (in MacWrite format)
- ❑ Windoids 1, 2, 3, 4, and 5
  [Windoids: Loaded with tips, scripts, and news from Apple HyperCard Users Group (AHUG).]

Micro Newsletter Folder

- ❑ December 1987 newsletter

StackWare* Folder

- ❑ ResCopier 2.78 [The friendliest, safest resource copier there is. Thank you Steve Maller.]
- ❑ Animation Stack
- ❑ Check Wri/Reg
- ❑ Cookie Stacks
- ❑ Genealogy
- ❑ HyperMacintalk
- ❑ HyperTree 1.1
- ❑ Importer
- ❑ LooseNotes
- ❑ Merge Stacks
- ❑ QuickMemo
- ❑ Rev.Xref-Text 2
- ❑ Spreadsheet Construction Set
- ❑ Star Trek - TNG
- ❑ Text Writer
- ❑ YAM
- ❑ Common Sounds
- ❑ Deprotect
- ❑ Home Desk
- ❑ HyperTalk Tutorial
- ❑ HyperWrite 1.1
- ❑ ImportPict
- ❑ Margin Notes
- ❑ PostNote
- ❑ Resource Copier 1.2
- ❑ Sound Convert 1.01
- ❑ Stack Builder 3.0
- ❑ Super Memo Pad
- ❑ Traffic Stack

System Software Folder

- ❑ Finder 6.0 documentation (including MultiFinder 1.0)

Tech Tidbits Folder

- ❑ Tech Tidbits 11/20

USENET Digests Folder

- ❑ USENET v3-88 to 92
- ❑ USENET v3-94 to 95
- ❑ USENET v3-96 to 102
- ❑ DELPHI v3-48 to 49
- ❑ DELPHI v3-50
- ❑ DELPHI v3-51 to 52

Utilities Folder

- ❑ FreeView version 1.0

* StackWare Note: Most of the stacks have limited utility in and of themselves. Their value lies in serving to generate ideas for your own stacks. Also valuable for those at the scripting level are the many scripts available to illustrate scripting techniques. The Windoids (in the Developer's folder) are good information sources for the stack author and scripter. Finally, stack enthusiasts should not overlook the USENET Digests.

Please be legible. Help us keep our costs down by using a campus mailing address whenever possible; thanks.

MICROCOMPUTER NEWSLETTER SUBSCRIPTION REQUEST

Add ❑ Cancel ❑ Change ❑

Name _____

— If University of Minnesota Twin Cities Campus Mail:

Do not use a personal address; Campus Mail only delivers bulk-mailed items with an official departmental address.

Department _____

Building _____ Room _____

— If U.S. Postal Service:

Address _____

_____

City _____ State _____ Zip _____

University of Minnesota Affiliation. Please, check only one box.

Department ❑ Faculty ❑ Staff ❑ Student ❑ Alumni ❑ Other ❑

Microcomputer and Workstations Systems Group

phone-in First Aid for computer users since 1980

➥ Call our HelpLine
626–4276
(dial MA MICRO)

➥ Visit our HelpLine
Room 125, Shepherd Labs
East Bank Campus

➥ We're Available
9 am - 12 and 1:30 - 4 pm
Monday
Tuesday
Friday

9 a.m. through 4 p.m.
Wednesday
Thursday

MICROCOMPUTER NEWSLETTER
c/o Microcomputer and Workstation Systems Group
Academic Computing Services and Systems
University of Minnesota
Room 125, Shepherd Labs
100 Union Street SE
Minneapolis, MN 55455

Nonprofit Organization
U.S. Postage
PAID
Minneapolis, Mn 55414
Permit No. 155

Newsletter Reprints:
Kinkos has master copies of our newsletter. If you want back issues, Kinkos will make them for you for a nominal fee. The master copies are at the Kinkos shop at 306 15th Avenue SE, which is open seven days a week.

January 1988