CONVERGENCE OF A FINITE ELEMENT METHOD FOR THE DRIFT-DIFFUSION SEMICONDUCTOR DEVICE EQUATIONS: THE MULTIDIMENSIONAL CASE

By

Zhangxin Chen

and

Bernardo Cockburn

IMA Preprint Series # 1173

September 1993

CONVERGENCE OF A FINITE ELEMENT METHOD FOR THE DRIFT-DIFFUSION SEMICONDUCTOR DEVICE EQUATIONS: THE MULTIDIMENSIONAL CASE

ZHANGXIN CHEN* AND BERNARDO COCKBURN†

Abstract. An explicit finite element method is considered and analyzed to numerically solve the drift-diffusion semiconductor device equations in two space dimensions. The method is based on the use of a mixed finite element method for the approximation of the electric field and a discontinuous upwinding finite element method for the approximation of the electron and hole concentrations. The mixed method gives an approximate electric field in the precise form needed by the discontinuous method, which is trivially conservative and fully parallelizable. The method, considered as a scheme for the concentrations, is shown to satisfy a maximum principle and a *a priori* estimate of entropy dissipation. Based on these stability results, its convergence to the unique weak solution is proven. Extensive numerical simulations are presented to test the performance of the method and to indicate the behavior of the solution.

Key words. semiconductor device, finite element, mixed method, convergence, entropy dissipation, conservation law

AMS(MOS) subject classifications. 65N30, 65N10, 35L60, 35L65

1. Introduction. In this paper we formulate and analyze an explicit finite element method for the transient behavior of the drift-diffusion semiconductor model:

$$u_t - \operatorname{div} J_u = -\lambda^2 \alpha_u \mathcal{R}(u,p), \quad t > 0, \quad (x,y) \in \Omega, \tag{1.1a}$$

$$p_t + \operatorname{div} J_p = -\lambda^2 \alpha_p \mathcal{R}(u,p), \quad t > 0, \quad (x,y) \in \Omega, \tag{1.1b}$$

where $\Omega = (0,1)^2$, u and p are the (scaled) electron and hole concentrations, $\mathcal{R}$ is the carrier recombination-generation rate, λ is the normed Debye length, α_u and α_p are the lifetime-dependent constants, and J_u and J_p are the current densities defined by

$$J_u = \mu_u(\beta)(\lambda^2 \nabla u - u\beta), \quad t > 0, \quad (x,y) \in \Omega, \tag{1.2a}$$

$$J_p = -\mu_p(\beta)(\lambda^2 \nabla p + p\beta), \quad t > 0, \quad (x,y) \in \Omega, \tag{1.2b}$$

where μ_u and μ_p are the field-dependent electron and hole mobilities, and β is the (scaled) negative electric field given by

$$-\operatorname{div} \beta = C - u + p, \quad t > 0, \quad (x,y) \in \Omega, \tag{1.3a}$$

$$\beta = \nabla \phi, \quad t > 0, \quad (x,y) \in \Omega, \tag{1.3b}$$

with C being the (scaled) doping profile and ϕ being the (scaled) potential.

The numerical method considered in this paper is an extension of the finite element method introduced in the one-dimensional case [4], [5], [11], [12], which combines a mixed method for a piecewise linear approximation of the electric field, $-\beta$, with an

*Department of Mathematics and Institute for Scientific Computation, Texas A&M University, College Station, TX 77843. Supported in part by the Army Research Office contract number DAAL03-89-C-0038 with the University of Minnesota Army High Performance Computing Research Center.

†School of Mathematics, University of Minnesota, Minneapolis, Minnesota 55455. Partly supported by the Army Research Office contract number DAALO3-89-C-0038 with the University of Minnesota Army High Performance Computing Research Center.

explicit upwinding method for piecewise constant approximations of the electron and hole concentrations, u and p. It has been first introduced for the so-called unipolar model with the diffusion term neglected [11], [12]. Then, it has been extended to the full one-dimensional system [4], [5]. The reason for using the mixed finite element approximation of the electric field is that the electron and hole concentration equations (1.1a-b) depend on the potential only through this field and the mixed method provides a better approximation of it than more standard Galerkin approaches would give [2], [3], [16]. The motivation for including the discontinuous upwinding finite element method in approximating u and p is that, since the normed Debye length ranges from 10^{-3} to 10^{-5}, the concentration equations, while formally parabolic, are in fact more nearly hyperbolic. Thus the upwinding method is applied to follow the transport more accurately than the standard finite difference or finite element method does. In particular, this method can capture discontinuities in solution without producing spurious oscillations [7], [8], [9], [10]. Another computational advantage of the method is its full parallelizability.

Stability and convergence results have been established for the one-dimensional problem [4], [5], [11], [12]. The numerical analysis for the two-dimensional problem is much more complicated. First, as shown in [11], the stability analysis of the numerical method heavily depends on a bound of the numerical electric field. In the former case, the bound of this field follows trivially from that of the concentrations. However, in the latter case, the derivation of a *a priori* estimate for the electric field is not trivial. Also, in the one-dimensional case, the boundedness of the total variation and the modulus of continuity in time of the approximate solution is proven, from which we can obtain convergence of the scheme to the weak solution of the differential equations. However, no proof of these properties is available in the high-dimensional case. The main reason for this is that the numerical electric field does not have the required smoothness in the latter case. Hence, the standard approach of convergence proof cannot be applied here.

In this paper, following [13], [14], a new technique is introduced to prove convergence of the scheme to the weak solution. The idea is that, instead of the usual total variation estimate, a weak bound on the entropy dissipation of the numerical scheme is established. Then, this bound is combined with DiPerna's uniqueness result [15] for classical scalar conservation laws to yield an L^1-convergence of the scheme.

To fix the ideas of the approach above, in this paper we consider the model problem

$$u_t + \operatorname{div}(u\beta) = 0, \qquad (x,y) \in \Omega, \qquad t > 0, \tag{1.4a}$$

$$u = u_D, \qquad (x,y) \in \partial\Omega_-, \quad t \geq 0, \tag{1.4b}$$

$$u(0,x,y) = u_{\text{init}}(x,y), \quad (x,y) \in \Omega, \tag{1.4c}$$

where

$$\partial\Omega_- = \{(x,y) \in \partial\Omega : \nu(x,y) \cdot \beta < 0\},$$

and β is given by

$$-\operatorname{div}\beta = 1 - u, \quad t > 0, \quad (x,y) \in \Omega, \tag{1.5a}$$

$$\beta = \nabla\phi, \quad t > 0, \quad (x,y) \in \Omega, \tag{1.5b}$$

$$\phi = \phi_D, \quad t \geq 0, \quad (x,y) \in \partial\Omega_D, \tag{1.5c}$$

$$\partial\phi/\partial\nu = 0, \quad t \geq 0, \quad (x,y) \in \partial\Omega_N, \tag{1.5d}$$

where ν denotes the normal unit-vector to $\partial\Omega$, $\partial\Omega = \partial\Omega_D \cup \partial\Omega_N$, $\partial\Omega_D \cap \partial\Omega_N = \emptyset$, and Ω_N contains the endpoints of its segments. The extension of the analysis below to the full model (1.1)-(1.3) can be carried out as in [5].

The finite element method will be defined in the next section. Then, in §3, we state and discuss our main results on a maximum principle (Theorem 3.1), an estimate on the entropy dissipation of the scheme (Theorem 3.2), and convergence to the weak solution (Theorem 3.3). The proof of the maximum principle and entropy dissipation boundedness is presented in §4 and §5, respectively. The convergence analysis is given in §6. Extensive numerical simulations will be presented in §7. These numerical results are devised to test the performance of the method and to indicate the qualitative behavior of the solution of the differential system (1.4)-(1.5). Finally, concluding remarks will be given in §8. A forthcoming paper is devoted to obtaining error estimates.

We end this section with a remark that the equation (1.4a) is not a classical conservation law. The value of the electric field β at a point (t, x, y) contains the information of all the values of the solution $u(t, \cdot, \cdot)$ on Ω. Hence a perturbation of the solution u at any given point of the domain has a global effect immediately. This is in sharp contrast with the classical conservation laws where local perturbations of the solution have a local effect in finite time.

2. The finite element method. In this section the finite element method for approximating the solution of the differential system of the previous section is formulated. Toward that end, let $\{x_{i+1/2}\}_{i=0}^{n_x} \times \{y_{j+1/2}\}_{j=0}^{n_y}$ be a partition of Ω with $x_{1/2} = y_{1/2} = 0$ and $x_{n_x+1/2} = y_{n_y+1/2} = 1$ and let $\{t^n\}_{n=0}^{n_T}$ be a partition of $[0, T]$ with $t^0 = 0$ and $t^{n_T} = T$. Then, set $I_i^x = (x_{i-1/2}, x_{i+1/2})$, $I_j^y = (y_{j-1/2}, y_{j+1/2})$, $\Delta x_i = x_{i+1/2} - x_{i-1/2}$, $\Delta y_j = y_{j+1/2} - y_{j-1/2}$, $J^n = [t^n, t^{n+1})$, and $\Delta t^n = t^{n+1} - t^n$. Associated with these partitions, we introduce the spaces

$$
\begin{aligned}
V_h &= \{v \in H(\mathrm{div};\Omega) : \ v|_{I_i^x \times I_j^y} = (a_{i,j}^1 + a_{i,j}^2 x, a_{i,j}^3 + a_{i,j}^4 y), \quad a_{i,j}^k \in \mathbb{R}, \\
&\qquad\qquad i = 1, \cdots, n_x, \ j = 1, \cdots, n_y, \quad v \cdot \nu|_{\partial\Omega_N} = 0\}, \\
W_h^\phi &= \{w \in L^2(\Omega) : \ w|_{I_i^x \times I_j^y} \in P^0(I_i^x \times I_j^y), \quad i = 1, \cdots, n_x, \ j = 1, \cdots, n_y\}, \\
W_h &= \{w \in L^\infty(\Omega) : \ w|_{I_i^x \times I_j^y} \in P^0(I_i^x \times I_j^y), \quad i = 1, \cdots, n_x, \ j = 1, \cdots, n_y\}, \\
W_{\Delta t} &= \{w \text{ right continuous} : \ w|_{J^n} \in P^0(J^n), \ n = 0, \cdots, n_T - 1\}.
\end{aligned}
$$

If $v \in V_h$, $v_{i+1/2,j}$ and $v_{i,j+1/2}$ will denote $v(x_{i+1/2}, y_j)$ and $v(x_i, y_{j+1/2})$, respectively. If $w \in W_h$, then $w_{i,j}$ represents the constant value $w(x, y)$, $(x, y) \in I_i^x \times I_j^y$. Finally, w^n will indicate the constant $w(t)$, $t \in J^n$, if $w \in W_{\Delta t}$.

Let $(\cdot, \cdot)$ indicate the inner product in $L^2(0,1)$ or $(L^2(0,1))^2$, and let P_h and $P_{\Delta t}$ denote the L^2-projections into W_h and $W_{\Delta t}$, respectively. To discretize (1.4) and (1.5), we first discretize the data by setting

$$u_{\mathrm{init},h} = P_h u_{\mathrm{init}}, \tag{2.1a}$$

$$u_{D,\Delta t} = P_{\Delta t} u_D. \tag{2.1b}$$

The approximate solution $u_h \in W_{\Delta t} \otimes W_h$ is required to satisfy the equation, for $n = 0, \cdots, n_T - 1$, $i = 1, \cdots, n_x$, and $j = 1, \cdots, n_y$,

$$\frac{u_{i,j}^{n+1} - u_{i,j}^n}{\Delta t^n} + \frac{f_{1,i+1/2,j}^n - f_{1,i-1/2,j}^n}{\Delta x_i} + \frac{f_{2,i,j+1/2}^n - f_{2,i,j-1/2}^n}{\Delta y_j} = 0, \tag{2.2a}$$

where

$$f^n_{1,i-1/2,j} = u^n_{i-1,j}\beta^{n^+}_{1,i-1/2,j} + u^n_{i,j}\beta^{n^-}_{1,i-1/2,j}, \tag{2.2b}$$

$$f^n_{2,i,j-1/2} = u^n_{i,j-1}\beta^{n^+}_{2,i,j-1/2} + u^n_{i,j}\beta^{n^-}_{2,i,j-1/2}. \tag{2.2c}$$

Finally, the electric potential and field $(\beta_h, \phi_h) \in W_{\Delta t} \otimes V_h \times W_{\Delta t} \otimes W_h^\phi$ is determined by the mixed finite element method, for $n = 0, \cdots, n_T$,

$$-(\operatorname{div} \beta^n_h, w) = (1 - u^n_h, w), \qquad \forall w \in W_h^\phi, \tag{2.3a}$$

$$(\beta^n_h, v) + (\phi^n_h, \operatorname{div} v) = \langle \phi^n_D, v \cdot \nu \rangle_{\partial\Omega_D}, \quad \forall v \in V_h. \tag{2.3b}$$

Now, the algorithm of our numerical method is as follows:

(2.4a) Compute the functions $u_{D,\Delta t}$, and $u_{\text{init},h}$ by (2.1);

(2.4b) Set $u_h(0,\cdot,\cdot) = u_{\text{init},h}(\cdot,\cdot)$;

(2.4c) For $n = 0, \cdots, n_T - 1$, compute $u_h(t^{n+1},\cdot,\cdot)$ as follows:

- (i) Compute $(\beta_h(t^n,\cdot,\cdot), \phi_h(t^n,\cdot,\cdot))$ by using the mixed finite element method (2.3);
- (ii) Compute $u_h(t^{n+1}, x, y)$ for $(x, y) \in \Omega$ by using the scheme (2.2).

We end this section with three remarks. First, it follows from the definition of V_h that the elements in V_h have continuous normal components on interelement edges. Thus, the numerical fluxes $f^n_{1,i-1/2,j}$ and $f^n_{2,i,j-1/2}$ in (2.2b-c) are all well-defined. Secondly, the lowest-order Raviart-Thomas mixed method on rectangles has been used in (2.3) [23]; however, the analysis in the next section can be carried out in the same way for the lowest-order triangular mixed elements. Moreover, the same results apply to the lowest-order Brezzi-Douglas-Marini mixed methods on triangles and rectangles [2]. Finally, for a given β_h, the scheme (2.2) is a modification of the well-known upwinding scheme. Moreover, it is conservative.

3. Stability and convergence results. In this section we state the stability and convergence results of the scheme (2.4). Let $J = (0, T)$. We assume that the initial and boundary data satisfy the following conditions:

$$u_{\text{init}},\ u_D \in [0, u^\star], \tag{3.1a}$$

$$|\phi_D| \le \phi^\star_D, \tag{3.1b}$$

$$\phi_D \in L^\infty(0, T; H^{3/2}(\partial\Omega_D)), \tag{3.1c}$$

$$u^\star \ge 1. \tag{3.1d}$$

We also need the two assumptions (3.3a) and (3.3b) below. Consider the problem

$$\begin{cases} -\Delta v = b, & (x,y) \in \Omega, \\ v = v_D, & (x,y) \in \partial\Omega_D, \\ \partial v/\partial\nu = 0, & (x,y) \in \partial\Omega_N, \end{cases} \tag{3.2}$$

and let (v_h, α_h) be the mixed finite element solution of (3.2) in $W_h^\phi \times V_h$. Then we assume that there are constants Q_1 and Q_2 independent of v and h such that

$$||\nabla v||_{L^\infty(\Omega)} \le Q_1 \left(||b||_{L^\infty(\Omega)} + \sup_{\partial\Omega_D} |v_D| \right), \tag{3.3a}$$

$$||\nabla v - \alpha_h||_{L^\infty(\Omega)} \le Q_2 \left(||b||_{L^2(\Omega)} + ||v_D||_{H^{3/2}(\partial\Omega_D)} \right). \tag{3.3b}$$

Remarks. First, we have required that $u^\star \geq 1$ in (3.1d). The maximum principle below is not true for $u^\star < 1$, as noted in [11]. This reflects the fact that along the characteristics of the equation (1.4) $u = 1$ is an asymptotically stable equilibrium point. Also, if the Dirichlet and Neumann segments meet under angles less than or equal to $\pi/2$, the result (3.3a) is true [19]. In the case of the meeting angles bigger than $\pi/2$, the following results still hold if the field-dependent mobility is introduced in (1.4a). For, in this case, $\mu_u(\beta)\beta$ is bounded [5]. Finally, if b is piecewise constant, then there is a constant Q independent of v and h such that (see, e.g., [18], [1])

$$||\nabla v - \alpha_h||_{L^\infty(\Omega)} \leq Q||\nabla v - \Pi_h \nabla v||_{L^\infty(\Omega)},$$

where Π_h is the Raviart-Thomas projection onto V_h [23]. Then, apply the approximation property of the operator Π_h [23] and an interpolation error estimate [6] to obtain

$$||\nabla v - \alpha_h||_{L^\infty(\Omega)} \leq Q||v||_{H^2(\Omega)},$$

which together with an L^2-theory for elliptic equations implies (3.3b). Namely, (3.3b) is true provided that b is piecewise constant.

We now state the following maximum principle.

THEOREM 3.1. (STABILITY). *In addition to the hypotheses* (3.1) *and* (3.3), *assume that for* $n = 0, \cdots, n_T - 1$ *the following* CFL *condition is satisfied:*

$$\Delta t^n \leq \min\left\{\frac{1}{u^\star}, \frac{1}{1+\beta^\star(2/\Delta x_i + 1/\Delta y_j)}, \frac{1}{1+\beta^\star(1/\Delta x_i + 2/\Delta y_j)}\right\}, \tag{3.4}$$

where $\beta^\star = \max\{Q_1, Q_2\}\left(2\max\{1, u^\star - 1\} + \phi_D^\star + ||\phi_D||_{L^\infty(0,T;H^{3/2}(\partial\Omega_D))}\right)$. *Then,*

$$u_h(t,x,y) \in [0, u^\star], \qquad (t,x,y) \in J \times \Omega, \tag{3.5a}$$

$$||\beta_h||_{L^\infty(0,T;L^\infty(\Omega))} \leq \beta^\star, \tag{3.5b}$$

$$||\operatorname{div}\beta_h||_{L^\infty(0,T;L^\infty(\Omega))} \leq \max\{1, u^\star - 1\}. \tag{3.5c}$$

THEOREM 3.2. (ESTIMATE OF ENTROPY DISSIPATION). *In addition to the hypotheses* (3.1) *and* (3.3), *assume that for* $n = 0, \cdots, n_T - 1$ *the following* CFL *condition is satisfied:*

$$\Delta t^n \leq \min\left\{\frac{1}{u^\star}, \frac{1}{1+\beta^\star(2/\Delta x_i + 1/\Delta y_j)}, \frac{1}{1+\beta^\star(1/\Delta x_i + 2/\Delta y_j)}, \frac{\Delta x_i}{5\beta^\star}, \frac{\Delta y_j}{5\beta^\star}\right\}. \tag{3.6}$$

Then,

$$\begin{aligned}
&\sum_{i=1}^{n_x}\sum_{j=1}^{n_y}\left(u_{i,j}^{n_T}\right)^2 \Delta x_i \Delta y_j + \sum_{n=0}^{n_T-1}\sum_{i=1}^{n_x}\sum_{j=1}^{n_y}\left\{\left(\frac{\Delta t^n}{\Delta x_i}\beta_{1,i+1/2,j}^{n^-}\right)^2\left(u_{i+1,j}^n - u_{i,j}^n\right)^2\right.\\
&\quad + \left(\frac{\Delta t^n}{\Delta x_i}\beta_{1,i-1/2,j}^{n^+}\right)^2\left(u_{i,j}^n - u_{i-1,j}^n\right)^2 + \left(\frac{\Delta t^n}{\Delta y_j}\beta_{2,i,j+1/2}^{n^-}\right)^2\left(u_{i,j+1}^n - u_{i,j}^n\right)^2\\
&\qquad\qquad \left. + \left(\frac{\Delta t^n}{\Delta y_j}\beta_{2,i,j-1/2}^{n^-}\right)^2\left(u_{i,j}^n - u_{i,j-1}^n\right)^2\right\}\Delta x_i \Delta y_j\\
&\leq \sum_{i=1}^{n_x}\sum_{j=1}^{n_y}\left(u_{i,j}^0\right)^2 \Delta x_i \Delta y_j + Tu^\star\left(2 + u^\star + 4u^\star\beta^\star\right).
\end{aligned} \tag{3.7}$$

To state the convergence result, let us first define a weak solution of (1.4) and (1.5). For this, set

$$W^{1,1}(\mathrm{div};\Omega) = \{v \in (L^1(\Omega))^2 : \ \mathrm{div}\, v \in L^1(\Omega)\}, \tag{3.8a}$$

$$f(u_{\mathrm{left}}, u_{\mathrm{right}}; \alpha) = u_{\mathrm{left}}\alpha^+ + u_{\mathrm{right}}\alpha^-, \tag{3.8b}$$

where $\alpha^+ = \max\{\alpha, 0\}$ and $\alpha^- = \min\{\alpha, 0\}$.

Definition. A weak solution of (1.4) and (1.5) is defined to be a triple of functions $(u, \beta, \phi) \in L^1(J \times \Omega) \times L^1(J; W^{1,1}(\mathrm{div};\Omega)) \times L^1(J \times \Omega)$ such that

$$\begin{aligned} &(u, \varphi_t)_{J\times\Omega} + (u\beta, \nabla\varphi)_{J\times\Omega} + (u_{\mathrm{init}}, \varphi)|_{t=0} \\ &\quad - (f(u, u_D; \beta\cdot\nu), \varphi)_{J\times(\partial\Omega\setminus\partial\Omega_N)} = 0, \quad \forall\varphi \in C_0^1\left([0,T)\times\overline{\Omega}\right), \end{aligned} \tag{3.9a}$$

and

$$-(\mathrm{div}\,\beta, w)_{J\times\Omega} = (1-u, w)_{J\times\Omega}, \quad \forall w \in L^\infty(J\times\Omega), \tag{3.9b}$$

$$\begin{aligned} (\beta, v)_{J\times\Omega} + (\mathrm{div}\, v, \phi)_{J\times\Omega} &= \langle \phi_D, v\cdot\nu\rangle_{J\times\partial\Omega_D}, \\ &\forall v \in L^\infty(J\times\Omega) \cap L^\infty(J; H(\mathrm{div};\Omega)). \end{aligned} \tag{3.9c}$$

Note that the role of the flux f is to select the correct boundary value for u and that the smoothness of $\beta(t,\cdot,\cdot)$ guarantees the uniqueness of weak solution to (3.9) [22]. Let $\Delta x = \max_{1\le i\le n_x}\Delta x_i$, $\Delta y = \max_{1\le i\le n_y}\Delta y_i$, and $\Delta t = \max_{0\le i\le n_T}\Delta t^n$. We now state the following convergence result.

THEOREM 3.3. (CONVERGENCE). *Suppose, in addition to the hypotheses* (3.1), (3.3), *and* (3.6), *that*

$$\Delta x/(\Delta t)^{1/2},\ \Delta y/(\Delta t)^{1/2} \to 0 \quad \text{as } \Delta x,\ \Delta y \to 0. \tag{3.10}$$

Then the sequence $\{(u_h, \beta_h, \phi_h)\}_{h>0}$ *produced by the scheme* (2.4) *converges in* $L^1(J\times\Omega)\times L^1(J; W^{1,1}(\mathrm{div};\Omega))\times L^1(J\times\Omega)$ *to the unique weak solution* (u, β, ϕ) *of* (1.4) *and* (1.5).

4. A stability analysis. In this section we prove Theorem 3.1.

LEMMA 4.1. *For* $n = 0, \cdots, n_T$, *we have*

$$\begin{aligned} &\frac{1}{\Delta x_i}(\beta^n_{1,i+1/2,j} - \beta^n_{1,i-1/2,j}) + \frac{1}{\Delta y_j}(\beta^n_{2,i,j+1/2} - \beta^n_{2,i,j-1/2}) \\ &\qquad = -(1-u^n_{i,j}), \qquad i = 1,\cdots,n_x,\ j = 1,\cdots,n_y. \end{aligned} \tag{4.1}$$

The result follows by choosing $w = 1$ on $I^x_i \times I^y_j$ and equal to zero elsewhere in (2.3a).

LEMMA 4.2. *Suppose that* (3.1) *and the following condition are satisfied:*

$$1 - \frac{\Delta t^n}{\Delta x_i}(\beta^{n+}_{1,i+1/2,j} - \beta^{n-}_{1,i-1/2,j}) - \frac{\Delta t^n}{\Delta y_j}(\beta^{n+}_{2,i,j+1/2} - \beta^{n-}_{2,i,j-1/2}) \ge \Delta t^n. \tag{4.2}$$

Then, if

$$u^n_h(x,y) \in [0, u^\star], \quad (x,y) \in \Omega, \tag{4.3}$$

we have

$$u_h^{n+1}(x,y) \in [0, u^\star], \quad (x,y) \in \Omega. \tag{4.4}$$

Proof. . For $i = 1, \cdots, n_x$ and $j = 1, \cdots, n_y$, it follows from (2.2) that

$$u_{i,j}^{n+1} = D_{i,j}^n (A_{i+1,j}^n u_{i+1,j}^n + A_{i,j+1}^n u_{i,j+1}^n + B_{i,j}^n u_{i,j}^n + E_{i-1,j}^n u_{i-1,j}^n + E_{i,j-1}^n u_{i,j-1}^n),$$

where

$$\begin{aligned}
A_{i+1,j}^n &= -\frac{\Delta t^n}{\Delta x_i} \beta_{1,i+1/2,j}^{n^-} / D_{i,j}^n, \\
A_{i,j+1}^n &= -\frac{\Delta t^n}{\Delta y_j} \beta_{2,i,j+1/2}^{n^-} / D_{i,j}^n, \\
B_{i,j}^n &= \frac{1}{D_{i,j}^n} \left\{ 1 - \frac{\Delta t^n}{\Delta x_i} \left(\beta_{1,i+1/2,j}^{n^+} - \beta_{1,i-1/2,j}^{n^-} \right) - \frac{\Delta t^n}{\Delta y_j} \left(\beta_{2,i,j+1/2}^{n^+} - \beta_{2,i,j-1/2}^{n^-} \right) \right\}, \\
E_{i-1,j}^n &= \frac{\Delta t^n}{\Delta x_i} \beta_{1,i-1/2,j}^{n^+} / D_{i,j}^n, \\
E_{i,j-1}^n &= \frac{\Delta t^n}{\Delta y_j} \beta_{2,i,j-1/2}^{n^+} / D_{i,j}^n, \\
D_{i,j}^n &= 1 - \frac{\Delta t^n}{\Delta x_i} \left(\beta_{1,i+1/2,j}^n - \beta_{1,i-1/2,j}^n \right) - \frac{\Delta t^n}{\Delta y_j} \left(\beta_{2,i,j+1/2}^n - \beta_{2,i,j-1/2}^n \right).
\end{aligned}$$

Then, by (3.1), (4.2), and (4.3), we see that

$$\begin{aligned}
&D_{i,j}^n \geq \Delta t^n, \\
&A_{i+1,j}^n, A_{i,j+1}^n, B_{i,j}^n, E_{i-1,j}^n, E_{i,j-1}^n \geq 0, \\
&A_{i+1,j}^n + A_{i,j+1}^n + B_{i,j}^n + E_{i-1,j}^n + E_{i,j-1}^n = 1,
\end{aligned}$$

so that

$$u_{i,j}^{n+1} \geq 0, \qquad i = 1, \cdots, n_x, \ j = 1, \cdots, n_y.$$

Next, in order to show that $u_h^{n+1} \leq u^\star$, we write $u_{i,j}^{n+1}$ as

$$\begin{aligned}
u_{i,j}^{n+1} =& D_{i,j}^n \Big\{ u^\star - A_{i+1,j}^n (u^\star - u_{i+1,j}^n) - A_{i,j+1}^n (u^\star - u_{i,j+1}^n) - B_{i,j}^n (u^\star - u_{i,j}^n) \\
&- E_{i-1,j}^n (u^\star - u_{i-1,j}^n) - E_{i,j-1}^n (u^\star - u_{i,j-1}^n) \Big\} \\
=& u^\star D_{i,j}^n (1 - F_{i,j}^n),
\end{aligned}$$

where

$$\begin{aligned}
F_{i,j}^n =& A_{i+1,j}^n \left(1 - \frac{u_{i+1,j}^n}{u^\star} \right) + A_{i,j+1}^n \left(1 - \frac{u_{i,j+1}^n}{u^\star} \right) + B_{i,j}^n \left(1 - \frac{u_{i,j}^n}{u^\star} \right) \\
&+ E_{i-1,j}^n \left(1 - \frac{u_{i-1,j}^n}{u^\star} \right) + E_{i,j-1}^n \left(1 - \frac{u_{i,j-1}^n}{u^\star} \right).
\end{aligned}$$

Hence, it suffices to prove that

$$D_{i,j}^n - 1 \leq D_{i,j}^n F_{i,j}^n. \tag{4.5}$$

Notice that, by (4.2), (4.3), and (3.1d),

$$
\begin{aligned}
D^n_{i,j}F^n_{i,j} &\geq D^n_{i,j}B^n_{i,j}\left(1-\frac{u^n_{i,j}}{u^\star}\right) \\
&\geq \Delta t^n\left(1-\frac{u^n_{i,j}}{u^\star}\right) \\
&\geq \Delta t^n(1-u^n_{i,j}).
\end{aligned}
\tag{4.6}
$$

But, using (4.1) and (4.3), we have

$$
\begin{aligned}
D^n_{i,j}-1 &= -\frac{\Delta t^n}{\Delta x_i}\left(\beta^n_{1,i+1/2,j}-\beta^n_{1,i-1/2,j}\right)-\frac{\Delta t^n}{\Delta y_j}\left(\beta^n_{2,i,j+1/2}-\beta^n_{2,i,j-1/2}\right) \\
&= \Delta t^n(1-u^n_{i,j}).
\end{aligned}
$$

Hence, combine this and (4.6) to obtain (4.5); so, $u^{n+1}_{i,j}\leq u^\star$. The proof of the lemma is complete. □

We now rewrite the condition (4.2).

LEMMA 4.3. *If the next condition is satisfied:*

$$
\Delta t^n \leq \min\left\{\frac{1}{||u^n_h||_{L^\infty(\Omega)}},\ \frac{1}{1+||\beta^n_h||_{L^\infty(\Omega)}(2/\Delta x_i+1/\Delta y_j)},\ \frac{1}{1+||\beta^n_h||_{L^\infty(\Omega)}(1/\Delta x_i+2/\Delta y_j)}\right\},
\tag{4.7}
$$

so is (4.2).

(4.7) can be easily shown from (4.1) and (4.2).

Finally, the following lemma will be needed.

LEMMA 3.5. *Let β_h be defined by* (2.3). *Then, for $n=0,\cdots n_T$, we have*

$$
||\beta^n_h||_{L^\infty(\Omega)} \leq \max\{Q_1,Q_2\}(2||1-u^n_h||_{L^\infty(\Omega)}+\phi^\star_D+||\phi^n_D||_{H^{3/2}(\partial\Omega_D)}),
\tag{4.8}
$$

where Q_1 and Q_2 are defined in (3.3).

Proof. For each n, let v^n be the solution of (3.2) with $b=1-u^n_h$ and $v_D=\phi^n_D$. Then, by (2.3) and (3.3b), we see that

$$
||\nabla v^n-\beta^n_h||_{L^\infty(\Omega)} \leq Q_2\left(||1-u^n_h||_{L^2(\Omega)}+||\phi^n_D||_{H^{3/2}(\partial\Omega_D)}\right),
$$

since b is piecewise constant. Hence, an application of (3.3a) to v^n implies the desired result (4.8). The proof is finished. □

We are now in a position to prove Theorem 3.1.

Proof of Theorem 3.1. We proceed by means of an induction argument. For $n=0$, the result (3.5a) follows trivially from (2.1a) and (3.1a). Let the result be true for n. Then, by the induction hypothesis and (3.1d), we observe that

$$
||1-u^n_h||_{L^\infty(\Omega)} \leq \max\{1,u^\star-1\},
\tag{4.9}
$$

so that, by (4.8),

$$
||\beta^n_h||_{L^\infty(\Omega)} \leq \max\{Q_1,Q_2\}(2\max\{1,u^\star-1\}+\phi^\star_D+||\phi^n_D||_{H^{3/2}(\partial\Omega_D)}).
\tag{4.10}
$$

Hence, condition (3.4) implies (4.7) by (4.10) and thus (4.2). Consequently, we have the result (3.5a) for $n+1$ from Lemma 4.2. Namely, (3.5a) is true.

Obviously, (3.5b) follows from (4.10) and (3.5c) from (2.3b) and (4.9). The proof of the theorem has been completed. □

5. An estimate of entropy dissipation. In this section we prove Theorem 3.2. Let $U : \mathbb{R} \to \mathbb{R}$ be a function with Lipschitz second order derivative such that $U(0) = 0$. In the framework of classical conservation laws, U is called an 'entropy'. Given such an entropy, we have the following useful algebraic relation.

LEMMA 5.1. *For $n = 0, \cdots, n_T - 1$, $i = 0, \cdots, n_x$, and $j = 0, \cdots, n_y$, we have*

$$U(u_{i,j}^{n+1}) = U(u_{i,j}^n) + (u_{i,j}^{n+1} - u_{i,j}^n)U'(u_{i,j}^n) + \int_{u_{i,j}^n}^{u_{i,j}^{n+1}} (u_{i,j}^{n+1} - s)U''(s)ds. \tag{5.1}$$

Analogous relations hold for $u_{i+1,j}^n$, $u_{i,j}^n$, $u_{i-1,j}^n$, $u_{i,j+1}^n$, and $u_{i,j-1}^n$ in place of $u_{i,j}^{n+1}$.

LEMMA 5.2. *For $n = 0, \cdots, n_T - 1$, $i = 0, \cdots, n_x$, and $j = 0, \cdots, n_y$, we have*

$$\int_{u_{i,j}^n}^{u_{i,j}^{n+1}} (s - u_{i,j}^n)U''(s)ds = (u_{i,j}^{n+1} - u_{i,j}^n)^2 \int_0^1 U''(u_{i,j}^n(1-s) + u_{i,j}^{n+1}s)sds. \tag{5.2}$$

Similar expressions hold for $u_{i+1,j}^n$, $u_{i-1,j}^n$, $u_{i,j+1}^n$, and $u_{i,j-1}^n$ in place of $u_{i,j}^n$.

(5.2) can be easily seen from the change of variables.

LEMMA 5.3. *For $n = 0, \cdots, n_T - 1$, $i = 0, \cdots, n_x$, and $j = 0, \cdots, n_y$, we have*

$$\begin{aligned}
&\frac{U(u_{i,j}^{n+1}) - U(u_{i,j}^n)}{\Delta t^n} \\
&\quad + \frac{1}{\Delta x_i}\Big(f(U(u_{i,j}^n), U(u_{i+1,j}^n); \beta_{1,i+1/2,j}^n) - f(U(u_{i-1,j}^n), U(u_{i,j}^n); \beta_{1,i-1/2,j}^n)\Big) \\
&\quad + \frac{1}{\Delta y_j}\Big(f(U(u_{i,j}^n), U(u_{i,j+1}^n); \beta_{2,i,j+1/2}^n) - f(U(u_{i,j-1}^n), U(u_{i,j}^n); \beta_{2,i,j-1/2}^n)\Big) \\
&\quad - (u_{i,j}^n U'(u_{i,j}^n) - U(u_{i,j}^n))(1 - u_{i,j}^n) + H_{i,j}^n = 0,
\end{aligned}$$

where the flux f is defined as in (3.8b) *and*

$$\begin{aligned}
H_{i,j}^n = &- \frac{1}{\Delta t^n}\int_{u_{i,j}^n}^{u_{i,j}^{n+1}} (u_{i,j}^{n+1} - s)U''(s)ds \\
&- \frac{\beta_{1,i+1/2,j}^{n-}}{\Delta x_i}\int_{u_{i,j}^n}^{u_{i+1,j}^n} (u_{i+1,j}^n - s)U''(s)ds + \frac{\beta_{1,i-1/2,j}^{n+}}{\Delta x_i}\int_{u_{i,j}^n}^{u_{i-1,j}^n} (u_{i-1,j}^n - s)U''(s)ds \\
&- \frac{\beta_{2,i,j+1/2}^{n-}}{\Delta y_j}\int_{u_{i,j}^n}^{u_{i,j+1}^n} (u_{i,j+1}^n - s)U''(s)ds + \frac{\beta_{2,i,j-1/2}^{n+}}{\Delta y_j}\int_{u_{i,j}^n}^{u_{i,j-1}^n} (u_{i,j-1}^n - s)U''(s)ds.
\end{aligned}$$

The lemma follows by multiplying (2.2a) by $U'(u_{i,j}^n)$ and applying (2.2b), (2.2c), (4.1), (5.1), and simple algebraic calculations.

LEMMA 5.4. *For $n = 0, \cdots, n_T - 1$, $i = 0, \cdots, n_x$, and $j = 0, \cdots, n_y$, if*

$$-\frac{\Delta t^n}{\Delta x_i}\beta_{1,i+1/2,j}^{n-} \le \frac{1}{5}, \quad \frac{\Delta t^n}{\Delta x_i}\beta_{1,i-1/2,j}^{n+} \le \frac{1}{5}, \tag{5.3a}$$

$$-\frac{\Delta t^n}{\Delta y_j}\beta_{1,i,j+1/2}^{n-} \le \frac{1}{5}, \quad \frac{\Delta t^n}{\Delta y_j}\beta_{1,i,j-1/2}^{n+} \le \frac{1}{5}, \tag{5.3b}$$

then,

(5.4)
$$\begin{aligned}\Delta t^n H^n_{i,j} \geq & -2\Delta t^n(1-u^n_{i,j})(u^{n+1}_{i,j}-u^n_{i,j})u^n_{i,j}\\ &+\left(\frac{\Delta t^n}{\Delta x_i}\beta^{n^-}_{1,i+1/2,j}\right)^2(u^n_{i+1,j}-u^n_{i,j})^2+\left(\frac{\Delta t^n}{\Delta x_i}\beta^{n^+}_{1,i-1/2,j}\right)^2(u^n_{i,j}-u^n_{i-1,j})^2\\ &+\left(\frac{\Delta t^n}{\Delta y_j}\beta^{n^-}_{1,i,j+1/2}\right)^2(u^n_{i,j+1}-u^n_{i,j})^2+\left(\frac{\Delta t^n}{\Delta y_j}\beta^{n^+}_{1,i,j-1/2}\right)^2(u^n_{i,j}-u^n_{i,j-1})^2.\end{aligned}$$

Proof. We rewrite $H^n_{i,j}$ as follows:

$$\begin{aligned}H^n_{i,j} = & -\frac{1}{\Delta t^n}\int_{u^n_{i,j}}^{u^{n+1}_{i,j}}(u^{n+1}_{i,j}-s)U''(s)d\,s\\ &-\frac{\beta^{n^-}_{1,i+1/2,j}}{\Delta x_i}\int_{u^n_{i,j}}^{u^{n+1}_{i,j}}(u^n_{i+1,j}-s)U''(s)d\,s+\frac{\beta^{n^+}_{1,i-1/2,j}}{\Delta x_i}\int_{u^n_{i,j}}^{u^{n+1}_{i,j}}(u^n_{i-1,j}-s)U''(s)d\,s\\ &-\frac{\beta^{n^-}_{2,i,j+1/2}}{\Delta y_j}\int_{u^n_{i,j}}^{u^{n+1}_{i,j}}(u^n_{i,j+1}-s)U''(s)d\,s+\frac{\beta^{n^+}_{2,i,j-1/2}}{\Delta y_j}\int_{u^n_{i,j}}^{u^{n+1}_{i,j}}(u^n_{i,j-1}-s)U''(s)d\,s\\ &-\frac{\beta^{n^-}_{1,i+1/2,j}}{\Delta x_i}\int_{u^n_{i+1,j}}^{u^{n+1}_{i,j}}(s-u^n_{i+1,j})U''(s)d\,s+\frac{\beta^{n^+}_{1,i-1/2,j}}{\Delta x_i}\int_{u^n_{i-1,j}}^{u^{n+1}_{i,j}}(s-u^n_{i-1,j})U''(s)d\,s\\ &-\frac{\beta^{n^-}_{2,i,j+1/2}}{\Delta y_j}\int_{u^n_{i,j+1}}^{u^{n+1}_{i,j}}(s-u^n_{i,j+1})U''(s)d\,s+\frac{\beta^{n^+}_{2,i,j-1/2}}{\Delta y_j}\int_{u^n_{i,j-1}}^{u^{n+1}_{i,j}}(s-u^n_{i,j-1})U''(s)d\,s,\end{aligned}$$

so that, by (2.2) and (4.1),

$$\begin{aligned}\Delta t^n H^n_{i,j} = & -\Delta t^n(1-u^n_{i,j})u^n_{i,j}\int_{u^n_{i,j}}^{u^{n+1}_{i,j}}U''(s)d\,s\\ &-\frac{\Delta t^n}{\Delta x_i}\left(\beta^{n^-}_{1,i+1/2,j}\int_{u^n_{i+1,j}}^{u^{n+1}_{i,j}}(s-u^n_{i+1,j})U''(s)d\,s-\beta^{n^+}_{1,i-1/2,j}\int_{u^n_{i-1,j}}^{u^{n+1}_{i,j}}(s-u^n_{i-1,j})U''(s)d\,s\right)\\ &-\frac{\Delta t^n}{\Delta y_j}\left(\beta^{n^-}_{2,i,j+1/2}\int_{u^n_{i,j+1}}^{u^{n+1}_{i,j}}(s-u^n_{i,j+1})U''(s)d\,s-\beta^{n^+}_{2,i,j-1/2}\int_{u^n_{i,j-1}}^{u^{n+1}_{i,j}}(s-u^n_{i,j-1})U''(s)d\,s\right)\\ &+\left(1+\frac{\Delta t^n}{\Delta x_i}(\beta^{n^-}_{1,i+1/2,j}-\beta^{n^+}_{1,i-1/2,j})+\frac{\Delta t^n}{\Delta y_j}(\beta^{n^-}_{2,i,j+1}-\beta^{n^+}_{2,i,j+1})\right)\int_{u^n_{i,j}}^{u^{n+1}_{i,j}}(s-u^n_{i,j})U''(s)d\,s.\end{aligned}$$

Hence, take $U(v)=v^2$ in this exprssion and apply (5.2) to have

$$\begin{aligned}\Delta t^n H^n_{i,j} = & -2\Delta t^n(1-u^n_{i,j})u^n_{i,j}(u^{n+1}_{i,j}-u^n_{i,j})\\ &-\frac{\Delta t^n}{\Delta x_i}\left(\beta^{n^-}_{1,i+1/2,j}(u^{n+1}_{i,j}-u^n_{i+1,j})^2-\beta^{n^+}_{1,i-1/2,j}(u^{n+1}_{i,j}-u^n_{i-1,j})^2\right)\\ &-\frac{\Delta t^n}{\Delta y_j}\left(\beta^{n^-}_{2,i,j+1/2}(u^{n+1}_{i,j}-u^n_{i,j+1})^2-\beta^{n^+}_{2,i,j-1/2}(u^{n+1}_{i,j}-u^n_{i,j-1})^2\right)\\ &+\left(1+\frac{\Delta t^n}{\Delta x_i}(\beta^{n^-}_{1,i+1/2,j}-\beta^{n^+}_{1,i-1/2,j})+\frac{\Delta t^n}{\Delta y_j}(\beta^{n^-}_{2,i,j+1}-\beta^{n^+}_{2,i,j+1})\right)(u^{n+1}_{i,j}-u^n_{i,j})^2.\end{aligned}$$

Consequently, by (2.2), (4.1), and simple computations, we see that

$$
\begin{aligned}
\Delta t^n H^n_{i,j} = &- 2\Delta t^n (1-u^n_{i,j})u^n_{i,j}(u^{n+1}_{i,j}-u^n_{i,j}) \\
&- \frac{\Delta t^n}{\Delta x_i}\beta^{n-}_{1,i+1/2,j}\Big(1+\frac{\Delta t^n}{\Delta x_i}\beta^{n-}_{1,i+1/2,j}\Big)(u^n_{i+1,j}-u^n_{i,j})^2 \\
&+ \frac{\Delta t^n}{\Delta x_i}\beta^{n+}_{1,i-1/2,j}\Big(1-\frac{\Delta t^n}{\Delta x_i}\beta^{n+}_{1,i-1/2,j}\Big)(u^n_{i,j}-u^n_{i-1,j})^2 \\
&- \frac{\Delta t^n}{\Delta y_j}\beta^{n-}_{2,i,j+1/2}\Big(1+\frac{\Delta t^n}{\Delta y_j}\beta^{n-}_{2,i,j+1/2}\Big)(u^n_{i,j+1}-u^n_{i,j})^2 \\
&+ \frac{\Delta t^n}{\Delta y_j}\beta^{n+}_{2,i,j-1/2}\Big(1-\frac{\Delta t^n}{\Delta y_j}\beta^{n+}_{2,i,j-1/2}\Big)(u^n_{i,j}-u^n_{i,j-1})^2 \\
&- \left(\frac{\Delta t^n}{\Delta x_i}\right)^2 \beta^{n-}_{1,i+1/2,j}\beta^{n+}_{1,i-1/2,j}(u^n_{i+1,j}-u^n_{i,j})(u^n_{i,j}-u^n_{i-1,j}) \\
&- \frac{\Delta t^n}{\Delta x_i}\frac{\Delta t^n}{\Delta y_j}\beta^{n-}_{1,i+1/2,j}\beta^{n-}_{2,i,j+1/2}(u^n_{i+1,j}-u^n_{i,j})(u^n_{i,j+1}-u^n_{i,j}) \\
&- \frac{\Delta t^n}{\Delta x_i}\frac{\Delta t^n}{\Delta y_j}\beta^{n-}_{1,i+1/2,j}\beta^{n+}_{2,i,j-1/2}(u^n_{i+1,j}-u^n_{i,j})(u^n_{i,j}-u^n_{i,j-1}) \\
&- \frac{\Delta t^n}{\Delta x_i}\frac{\Delta t^n}{\Delta y_j}\beta^{n+}_{1,i-1/2,j}\beta^{n-}_{2,i,j+1/2}(u^n_{i,j}-u^n_{i-1,j})(u^n_{i,j+1}-u^n_{i,j}) \\
&- \frac{\Delta t^n}{\Delta x_i}\frac{\Delta t^n}{\Delta y_j}\beta^{n+}_{1,i-1/2,j}\beta^{n+}_{2,i,j-1/2}(u^n_{i,j}-u^n_{i-1,j})(u^n_{i,j}-u^n_{i,j-1}) \\
&- \left(\frac{\Delta t^n}{\Delta y_j}\right)^2 \beta^{n-}_{2,i,j+1/2}\beta^{n+}_{2,i,j-1/2}(u^n_{i,j+1}-u^n_{i,j})(u^n_{i,j}-u^n_{i,j-1}) \\
&+ (\Delta t^n)^2(u^n_{i,j})^2(1-u^n_{i,j})^2,
\end{aligned}
$$

which implies (5.4) by (5.3). This completes the proof. □

We are now ready to prove Theorem 3.2.

Proof of Theorem 3.2. From Lemma 4.3 with $U(v)=v^2$ and Lemma 4.4, we have

$$
\begin{aligned}
&(u^{n+1}_{i,j})^2-(u^n_{i,j})^2-\Delta t^n u^n_{i,j}(1-u^n_{i,j})(2u^{n+1}_{i,j}-u^n_{i,j}) \\
&\quad+\frac{\Delta t^n}{\Delta x_i}\Big(f((u^n_{i,j})^2,(u^n_{i+1,j})^2;\beta^n_{1,i+1/2,j})-f((u^n_{i-1,j})^2,(u^n_{i,j})^2;\beta^n_{1,i-1/2,j})\Big) \\
&\quad+\frac{\Delta t^n}{\Delta y_j}\Big(f((u^n_{i,j})^2,(u^n_{i,j+1})^2;\beta^n_{2,i,j+1/2})-f((u^n_{i,j-1})^2,(u^n_{i,j})^2;\beta^n_{2,i,j-1/2})\Big) \\
&\quad+\left(\frac{\Delta t^n}{\Delta x_i}\beta^{n-}_{1,i+1/2,j}\right)^2(u^n_{i+1,j}-u^n_{i,j})^2+\left(\frac{\Delta t^n}{\Delta x_i}\beta^{n+}_{1,i-1/2,j}\right)^2(u^n_{i,j}-u^n_{i-1,j})^2 \\
&\quad+\left(\frac{\Delta t^n}{\Delta y_j}\beta^{n-}_{1,i,j+1/2}\right)^2(u^n_{i,j+1}-u^n_{i,j})^2+\left(\frac{\Delta t^n}{\Delta y_j}\beta^{n+}_{1,i,j-1/2}\right)^2(u^n_{i,j}-u^n_{i,j-1})^2\le 0,
\end{aligned}
$$

since (3.6) implies (5.3) by (3.5b). Thus Theorem 3.2 follows by summing i, j, and n and applying the definition of $f(\cdot,\cdot;\cdot)$ and Theorem 3.1. The proof has been finished. □

6. A convergence analysis. In this section we prove Theorem 3.3. For this we first introduce a family of 'entropy forms' $\Theta(u,c;\beta;\varphi)$ as in classical conservation

laws:

$$\begin{aligned}\Theta(u,c;\beta;\varphi) = &-(|u-c|,\varphi_t)_{J\times\Omega} - (|u-c|\beta,\nabla\varphi)_{J\times\Omega}\\ &+(|u-c|,\varphi)|_{t=T} - (|u_{\text{init}}-c|,\varphi)|_{t=0}\\ &+(G(u-c,u_D-c;\beta\cdot\nu),\varphi)_{J\times(\partial\Omega\setminus\partial\Omega_N)}\\ &-(V(u,c)\operatorname{div}\beta,\varphi)_{J\times\Omega},\end{aligned}$$

where $c\in\mathbb{R}$, $\varphi\in C^1(\overline{J}\times\overline{\Omega})$, and the 'entropy flux' G and the function V are defined by

$$\begin{aligned}G(u_{\text{left}},u_{\text{right}};\alpha) &= |u_{\text{left}}|\alpha^+ + |u_{\text{right}}|\alpha^-,\\ V(u,c) &= |u-c| - u\ \text{sign}\ (u-c).\end{aligned}$$

Then the proof of Theorem 3.3 proceeds as follows. First, we prove that there is a subsequence $\{(u_{h'},\beta_{h'},\phi_{h'})\}_{h'>0}$ converging to a limit (u,β,ϕ) satisfying the weak equations (3.9b)-(3.9c). Then, we prove that, for every nonnegative $\varphi\in C^1(\overline{J}\times\overline{\Omega})$,

$$\lim_{h'\to 0}\Theta(u_{h'},c;\beta_{h'};\varphi) = \Theta(u,c;\beta;\varphi),\quad \forall c\in\mathbb{R}, \tag{6.1a}$$

$$\Theta(u,c;\beta;\varphi)\le 0,\quad \forall c\in\mathbb{R}. \tag{6.1b}$$

Since the weak solution of (3.9) is unique, this proves Theorem 3.3. The entropy form $\Theta(u,c;\beta;\varphi)$ will be also used in a forthcoming paper for error estimates.

6.1. A convergent subsequence. The ideas of the convergence proof presented in this and the following two subsections are motivated by paper [11]. However, the analysis below is much simpler than that given in [11]. We are here using the standard entropy $|\cdot|$, while a smoother entropy $U(\cdot)$ has been used there; the properties of total variation boundedness and continuity in time of the approximate solution have been used in [11], while the analysis here heavily depends on the property in Theorem 3.2, which is much weaker than those in [11].

LEMMA 6.1. *Assume that the hypotheses* (3.1), (3.3), *and* (3.6) *are satisfied. Then there exists a subsequence* $\{(u_{h'},\beta_{h'},\phi_{h'})\}_{h'>0}$ *converging as indicated in* Theorem 3.3 *to a limit* (u,β,ϕ) *satisfying* (3.9b)-(3.9c).

Proof. First, note that, from the L^∞-stability of the numerical scheme (2.2) (Theorem 3.1) and the boundedness of the derivatives of the approximate solution u_h (Theorem 3.2), an L^1-strong convergence theory [13], [14], [15] for classical conservation laws implies that there exists a subsequence $u_{h'}$ converging in $L^1(J\times\Omega)$ to a function u in $L^\infty(J\times\Omega)$.

Next, from (2.3a) and (2.3b) with $v=1$, we have

$$\begin{aligned}&\operatorname{div}(\beta_{h'_1}-\beta_{h'_2}) = u_{h'_1}-u_{h'_2},\\ &\int_\Omega(\beta_{h'_1}-\beta_{h'_2}) = 0,\end{aligned}$$

which means that $\{\beta_{h'}\}_{h'>0}$ is a Cauchy sequence in $L^1(J;W^{1,1}(\operatorname{div};\Omega))$. Denote by β the limit of this sequence. Again, by (2.3a) and (2.3b) with $v=1$, we see that β satisfies (3.9b) and (3.9c) with $v=1$.

Finally, using (2.3b) and a similar argument, we can show that $\{\phi_{h'}\}_{h'>0}$ is Cauchy sequence in $L^1(J\times\Omega)$ and that its limit ϕ satisfies (3.9c). This completes the proof. □

LEMMA 6.2. *Assume that for $c \in \mathbb{R}$ and nonnegative $\varphi \in C^1(\overline{J} \times \overline{\Omega})$,*

$$\lim_{h' \to 0} \Theta(u_{h'}, c; \beta_{h'}; \varphi) \leq 0. \tag{6.2a}$$

Then,

$$\lim_{h' \to 0} \Theta(u_{h'}, c; \beta_{h'}; \varphi) = \Theta(u, c; \beta; \varphi). \tag{6.2b}$$

Proof. First, for $c \in \mathbb{R}$ and nonnegative $\varphi \in C_0^1(\overline{J} \times \Omega)$, (6.2b) follows from (6.2a) and a standard argument for classical conservation laws [20], [24]. Also, in the case of $\varphi \in C_0^1(J \times \overline{\Omega})$, special care needs to be taken to handle the limits in the boundary terms of the form Θ. This is done in [21] in the framework of classical conservation laws. For the present problem, an argument for the corresponding one-dimensional problem has been carried out in [11] and can be easily extended to the two-dimensional case. We omit the details. □

It is now clear that it suffices to prove (6.2a), since it implies (6.1) by Lemma 6.2. This will be done in the next two subsections.

6.2. A discrete entropy inequality. The following discrete entropy inequality will be needed for obtaining an upper bound for $\Theta(u_{h'}, c; \beta_{h'}; \varphi)$.

LEMMA 6.3. *Under the* CFL *condition* (3.4), *we have, for $c \in \mathbb{R}$,*

$$\begin{aligned} &|u_{i,j}^{n+1} - c| - |u_{i,j}^n - c| + \frac{\Delta t^n}{\Delta x_i}\left(G_{i+1/2,j}^n - G_{i-1/2,j}^n\right) \\ &\quad + \frac{\Delta t^n}{\Delta y_j}\left(G_{i,j+1/2}^n - G_{i,j-1/2}^n\right) - V(u_{i,j}^{n+1}, c)(\operatorname{div} \beta_h^n)_{i,j} \Delta t^n \leq 0, \end{aligned}$$

where

$$\begin{aligned} G_{i+1/2,j}^n &= \beta_{1,i+1/2,j}^{n+} |u_{i,j}^n - c| + \beta_{1,i+1/2,j}^{n-} |u_{i+1,j}^n - c|, \\ G_{i,j+1/2}^n &= \beta_{2,i,j+1/2}^{n+} |u_{i,j}^n - c| + \beta_{2,i,j+1/2}^{n-} |u_{i,j+1}^n - c|. \end{aligned}$$

Proof. From (2.2) and the definition of the mixed finite element space V_h, we have, for $c \in \mathbb{R}$,

$$\begin{aligned} u_{i,j}^{n+1} - c = &\left(-\frac{\Delta t^n}{\Delta x_i} \beta_{1,i+1/2,j}^{n-}\right)(u_{i+1,j}^n - c) + \left(-\frac{\Delta t^n}{\Delta y_j} \beta_{2,i,j+1/2}^{n-}\right)(u_{i,j+1}^n - c) \\ &+ \left\{1 - \frac{\Delta t^n}{\Delta x_i}(\beta_{1,i+1/2,j}^{n+} - \beta_{1,i-1/2,j}^{n-}) - \frac{\Delta t^n}{\Delta y_j}(\beta_{2,i,j+1/2}^{n+} - \beta_{2,i,j-1/2}^{n-})\right\}(u_{i,j}^n - c) \\ &+ \left(\frac{\Delta t^n}{\Delta x_i} \beta_{1,i-1/2,j}^{n+}\right)(u_{i-1,j}^n - c) + \left(\frac{\Delta t^n}{\Delta y_j} \beta_{2,i,j-1/2}^{n+}\right)(u_{i,j-1}^n - c) \\ &- \Delta t^n (\operatorname{div} \beta_h^n)_{i,j} c. \end{aligned}$$

Note that the term between the brackets is nonnegative by (3.4). Thus the lemma follows by multiplying this expression by sign $(u_{i,j}^{n+1} - c)$. □

We shall also need the following technical lemma.

LEMMA 6.4. *For $n = 0, \cdots, n_T - 1$, $i = 0, \cdots, n_x$, and $j = 0, \cdots, n_y$, we have*

$$\begin{aligned}
\operatorname{div}(\beta_h^{n+1} - \beta_h^n) &= u_h^{n+1} - u_h^n, \\
|u_{i,j}^{n+1} - u_{i,j}^n| \le &- \frac{\Delta t^n}{\Delta x_i} \beta_{1,i+1/2,j}^{n-} |u_{i+1,j}^n - u_{i,j}^n| \\
&- \frac{\Delta t^n}{\Delta y_j} \beta_{2,i,j+1/2}^{n-} |u_{i,j+1}^n - u_{i,j}^n| + \Delta t^n u_{i,j}^n |1 - u_{i,j}^n| \\
&+ \frac{\Delta t^n}{\Delta x_i} \beta_{1,i-1/2,j}^{n+} |u_{i,j}^n - u_{i-1,j}^n| \\
&+ \frac{\Delta t^n}{\Delta y_j} \beta_{2,i,j-1/2}^{n+} |u_{i,j}^n - u_{i,j-1}^n|.
\end{aligned}$$

Proof. The first equality follows from (2.3a) while the second inequality follows from (2.2) and (4.1). □

6.3. An upper bound of entropy form. In this section we obtain an upper bound for $\Theta(u_{h'}, c; \beta_{h'}; \varphi)$, which implies the inequality (6.2a). We first have the following decomposition of $\Theta(u_{h'}, c; \beta_{h'}; \varphi)$.

Let, for $\varphi \in C^1(\overline{J} \times \overline{\Omega})$,

$$\begin{aligned}
\varphi_{i,j}^n &= \frac{1}{\Delta x_i} \frac{1}{\Delta y_j} \int_{x_{i-1/2}}^{x_{i+1/2}} \int_{y_{j-1/2}}^{y_{j+1/2}} \varphi(t^n, x, y)\, dx\, dy, \\
\varphi_{i,j}^{n+1/2} &= \frac{1}{\Delta t^n} \frac{1}{\Delta x_i} \frac{1}{\Delta y_j} \int_{t^n}^{t^{n+1}} \int_{x_{i-1/2}}^{x_{i+1/2}} \int_{y_{j-1/2}}^{y_{j+1/2}} \varphi(t, x, y)\, dt\, dx\, dy, \\
\varphi_{i+1/2,j}^{n+1/2} &= \frac{1}{\Delta t^n} \frac{1}{\Delta y_j} \int_{t^n}^{t^{n+1}} \int_{y_{j-1/2}}^{y_{j+1/2}} \varphi(t, x_{i+1/2}, y)\, dt\, dy, \\
\varphi_{i,j+1/2}^{n+1/2} &= \frac{1}{\Delta t^n} \frac{1}{\Delta x_i} \int_{t^n}^{t^{n+1}} \int_{y_{j-1/2}}^{y_{j+1/2}} \varphi(t, x, y_{j+1/2})\, dt\, dx.
\end{aligned}$$

LEMMA 6.5. (DECOMPOSITION OF Θ). *We have*

$$\Theta(u_h, c; \beta_h; \varphi) = \Theta_{ent}(u_h, c; \beta_h; \varphi) + \Theta_{com}(u_h, c; \beta_h; \varphi),$$

where (with arguments omitted)

$$\begin{aligned}
\Theta_{ent} = \sum_{n=0}^{n_T-1} \sum_{i=1}^{n_x} \sum_{j=1}^{n_y} \Big\{ &|u_{i,j}^{n+1} - c| - |u_{i,j}^n - c| + \frac{\Delta t^n}{\Delta x_i} \left(G_{i+1/2,j}^n - G_{i-1/2,j}^n \right) \\
&+ \frac{\Delta t^n}{\Delta y_j} \left(G_{i,j+1/2}^n - G_{i,j-1/2}^n \right) - V(u_{i,j}^{n+1}, c)(\operatorname{div} \beta_h^n)_{i,j} \Delta t^n \Big\} \varphi_{i,j}^{n+1} \Delta x_i \Delta y_j,
\end{aligned}$$

and

$$\Theta_{com} = \sum_{n=0}^{n_T-1}\sum_{i=1}^{n_x}\sum_{j=1}^{n_y}\Big\{(|u^n_{i+1,j}-c|-|u^n_{i,j}-c|)(-\beta^{n^-}_{1,i+1/2,j})(\varphi^{n+1}_{i,j}-\varphi^{n+1/2}_{i+1/2,j})$$
$$+(|u^n_{i-1,j}-c|-|u^n_{i,j}-c|)(\beta^{n^+}_{1,i-1/2,j})(\varphi^{n+1}_{i,j}-\varphi^{n+1/2}_{i-1/2,j})\Big\}\Delta t^n\Delta y_j$$
$$+\sum_{n=0}^{n_T-1}\sum_{i=1}^{n_x}\sum_{j=1}^{n_y}\Big\{(|u^n_{i,j+1}-c|-|u^n_{i,j}-c|)(-\beta^{n^-}_{2,i,j+1/2})(\varphi^{n+1}_{i,j}-\varphi^{n+1/2}_{i,j+1/2})$$
$$+(|u^n_{i,j-1}-c|-|u^n_{i,j}-c|)(\beta^{n^+}_{2,i,j-1/2})(\varphi^{n+1}_{i,j}-\varphi^{n+1/2}_{i,j-1/2})\Big\}\Delta t^n\Delta x_i$$
$$-\sum_{n=0}^{n_T-1}\sum_{i=1}^{n_x}\sum_{j=1}^{n_y}(\operatorname{div}\beta^n_h)_{i,j}u^n_{i,j}\,sign(u^n_{i,j}-c)(\varphi^{n+1}_{i,j}-\varphi^{n+1/2}_{i,j})\Delta t^n\Delta x_i\Delta y_j$$
$$+\sum_{n=0}^{n_T-1}\sum_{i=1}^{n_x}\sum_{j=1}^{n_y}(\operatorname{div}\beta^n_h)_{i,j}(V(u^{n+1}_{i,j},c)-V(u^n_{i,j},c))\varphi^{n+1}_{i,j}\Delta t^n\Delta x_i\Delta y_j.$$

Proof. From the definition of Θ and the fact that $\operatorname{div}\beta_h$ is piecewise constant, we have

$$\Theta = \Psi_t + \Psi_x + \Psi,$$

where

$$\Psi_t = -\sum_{n=0}^{n_T-1}\sum_{i=1}^{n_x}\sum_{j=1}^{n_y}|u^n_{i,j}-c|(\varphi^{n+1}_{i,j}-\varphi^n_{i,j})\Delta x_i\Delta y_j + \sum_{i=1}^{n_x}\sum_{j=1}^{n_y}|u^{n_T}_{i,j}-c|\varphi^{n_T}_{i,j}\Delta x_i\Delta y_j$$
$$-\sum_{i=1}^{n_x}\sum_{j=1}^{n_y}|u^0_{i,j}-c|\varphi^0_{i,j}\Delta x_i\Delta y_j,$$
$$\Psi_x = -\sum_{n=0}^{n_T-1}\sum_{i=1}^{n_x}\sum_{j=1}^{n_y}|u^n_{i,j}-c|\left(\beta^n_{1,i+1/2,j}\varphi^{n+1/2}_{i+1/2,j}-\beta^n_{1,i-1/2,j}\varphi^{n+1/2}_{i-1/2,j}\right)\Delta t^n\Delta y_j$$
$$-\sum_{n=0}^{n_T-1}\sum_{i=1}^{n_x}\sum_{j=1}^{n_y}|u^n_{i,j}-c|\left(\beta^n_{2,i,j+1/2}\varphi^{n+1/2}_{i,j+1/2}-\beta^n_{2,i,j-1/2}\varphi^{n+1/2}_{i,j-1/2}\right)\Delta t^n\Delta x_i$$
$$+\sum_{n=0}^{n_T-1}\sum_{j=1}^{n_y}G^n_{n_x+1/2,j}\varphi^{n+1/2}_{n_x+1/2,j}\Delta t^n\Delta y_j - \sum_{n=0}^{n_T-1}\sum_{j=1}^{n_y}G^n_{1/2,j}\varphi^{n+1/2}_{1/2,j}\Delta t^n\Delta y_j$$
$$+\sum_{n=0}^{n_T-1}\sum_{i=1}^{n_x}G^n_{i,n_y+1/2}\varphi^{n+1/2}_{i,n_y+1/2}\Delta t^n\Delta x_i - \sum_{n=0}^{n_T-1}\sum_{i=1}^{n_x}G^n_{i,1/2}\varphi^{n+1/2}_{i,1/2}\Delta t^n\Delta x_i,$$
$$\Psi = -\sum_{n=0}^{n_T-1}\sum_{i=1}^{n_x}\sum_{j=1}^{n_y}(\operatorname{div}\beta^n_h)_{i,j}u^n_{i,j}\ \operatorname{sign}\ (u^n_{i,j}-c)\varphi^{n+1/2}_{i,j}\Delta t^n\Delta x_i\Delta y_j.$$

Then simple algebraic manipulations yield the desired result. We refer to [11] for more details in the one-dimensional case. □

LEMMA 6.6. (UPPER BOUND OF Θ). *Suppose that the* CFL *condition* (3.6) *is satisfied. Then,*

$$\Theta_{ent} \leq 0,$$

$$\begin{aligned}\Theta_{com} \leq & Q_3 \left(\frac{T}{\Delta t}\right)^{1/2} \Big\{ \frac{1}{2}\Delta x ||\varphi_x||_{L^\infty(J\times\Omega)} + \frac{1}{2}\Delta y ||\varphi_y||_{L^\infty(J\times\Omega)} + \frac{1}{2}\Delta t ||\varphi_t||_{L^\infty(J\times\Omega)} \\ & + (2u^\star + |c|)(\Delta x + \Delta y)||\varphi||_{L^\infty(J\times\Omega)} \Big\} \\ & + Q_4 \Delta t (3||\varphi||_{L^\infty(J\times\Omega)} + ||\varphi_t||_{L^\infty(J\times\Omega)}),\end{aligned}$$

where

$$\begin{aligned} Q_3 &= 4\sqrt{(u^\star)^2 + Tu^\star(2 + u^\star + 4u^\star\beta^\star)}, \\ Q_4 &= u^\star \max\{1, u^\star - 1\} \max\{T, 1\}(2u^\star + |c| + \frac{1}{2}). \end{aligned}$$

Proof. The first inequality follows immediately from Lemmas 6.3 and 6.5. To prove the second inequality, note that, by Theorem 3.1 and a simple integration by parts in the last term of Θ_{com},

$$\begin{aligned}|\Theta_{com}| \leq & \sum_{n=0}^{n_T-1}\sum_{i=1}^{n_x}\sum_{j=1}^{n_y} \Big\{ |u^n_{i+1,j} - u^n_{i,j}||\beta^{n^-}_{1,i+1/2,j}||\varphi^{n+1}_{i,j} - \varphi^{n+1/2}_{i+1/2,j}| \\ & + |u^n_{i-1,j} - u^n_{i,j}||\beta^{n^+}_{1,i-1/2,j}||\varphi^{n+1}_{i,j} - \varphi^{n+1/2}_{i-1/2,j}| \Big\} \Delta t^n \Delta y_j \\ & + \sum_{n=0}^{n_T-1}\sum_{i=1}^{n_x}\sum_{j=1}^{n_y} \Big\{ |u^n_{i,j+1} - u^n_{i,j}||\beta^{n^-}_{2,i,j+1/2}||\varphi^{n+1}_{i,j} - \varphi^{n+1/2}_{i,j+1/2}| \\ & + |u^n_{i,j-1} - u^n_{i,j}||\beta^{n^+}_{2,i,j-1/2}||\varphi^{n+1}_{i,j} - \varphi^{n+1/2}_{i,j-1/2}| \Big\} \Delta t^n \Delta x_i \\ & + u^\star \max\{1, u^\star - 1\} \sum_{n=0}^{n_T-1}\sum_{i=1}^{n_x}\sum_{j=1}^{n_y} |\varphi^{n+1}_{i,j} - \varphi^{n+1/2}_{i,j}| \Delta t^n \Delta x_i \Delta y_j \\ & + \sum_{n=0}^{n_T-1}\sum_{i=1}^{n_x}\sum_{j=1}^{n_y} |V(u^n_{i,j}, c)||(\operatorname{div}\beta^{n-1}_h)_{i,j}\varphi^n_{i,j} - (\operatorname{div}\beta^n_h)_{i,j}\varphi^{n+1}_{i,j}| \Delta t^n \Delta x_i \Delta y_j \\ & + \Delta t \max\{1, u^\star - 1\} \sum_{i=1}^{n_x}\sum_{j=1}^{n_y} |V(u^{n_T}_{i,j}, c)|\varphi^{n_T}_{i,j} \Delta x_i \Delta y_j \\ & + \Delta t \max\{1, u^\star - 1\} \sum_{i=1}^{n_x}\sum_{j=1}^{n_y} |V(u^0_{i,j}, c)|\varphi^0_{i,j} \Delta x_i \Delta y_j, \end{aligned}$$

where $\beta_h^{-1} = \beta_h^0$. Also, observe that

$$\begin{aligned} |\varphi^{n+1}_{i,j} - \varphi^{n+1/2}_{i+1/2,j}| &\leq \frac{1}{2}\Delta x_i ||\varphi_x||_{L^\infty(J\times\Omega)} + \frac{1}{2}\Delta t^n ||\varphi_t||_{L^\infty(J\times\Omega)}, \\ |\varphi^{n+1}_{i,j} - \varphi^{n+1/2}_{i,j+1/2}| &\leq \frac{1}{2}\Delta y_j ||\varphi_y||_{L^\infty(J\times\Omega)} + \frac{1}{2}\Delta t^n ||\varphi_t||_{L^\infty(J\times\Omega)}, \\ |\varphi^{n+1}_{i,j} - \varphi^{n+1/2}_{i,j}| &\leq \frac{1}{2}\Delta t^n ||\varphi_t||_{L^\infty(J\times\Omega)}, \\ |\varphi^{n+1}_{i,j} - \varphi^{n}_{i,j}| &\leq \Delta t^n ||\varphi_t||_{L^\infty(J\times\Omega)}. \end{aligned}$$

Then, apply the Hölder inequality, Lemma 6.4, and Theorem 3.1 to obtain

$$
\begin{aligned}
|\Theta_{com}| \le \left(\frac{T}{\Delta t}\right)^{1/2} & \left\{\frac{1}{2}\Delta x||\varphi_x||_{L^\infty(J\times\Omega)} + \frac{1}{2}\Delta y||\varphi_y||_{L^\infty(J\times\Omega)}\right. \\
& \left. + \frac{1}{2}\Delta t||\varphi_t||_{L^\infty(J\times\Omega)} + (2u^\star + |c|)(\Delta x + \Delta y)||\varphi||_{L^\infty(J\times\Omega)}\right\} \\
& \times \left\{\left(\sum_{n=0}^{n_T-1}\sum_{i=1}^{n_x}\sum_{j=1}^{n_y}\left(\frac{\Delta t^n}{\Delta x_i}\beta^{n-}_{1,i+1/2,j}\right)^2 |u^n_{i+1,j} - u^n_{i,j}|^2\Delta x_i\Delta y_j\right)^{1/2}\right. \\
& + \left(\sum_{n=0}^{n_T-1}\sum_{i=1}^{n_x}\sum_{j=1}^{n_y}\left(\frac{\Delta t^n}{\Delta x_i}\beta^{n+}_{1,i-1/2,j}\right)^2 |u^n_{i,j} - u^n_{i-1,j}|^2\Delta x_i\Delta y_j\right)^{1/2} \\
& + \left(\sum_{n=0}^{n_T-1}\sum_{i=1}^{n_x}\sum_{j=1}^{n_y}\left(\frac{\Delta t^n}{\Delta y_j}\beta^{n-}_{2,i,j+1/2}\right)^2 |u^n_{i,j+1} - u^n_{i,j}|^2\Delta x_i\Delta y_j\right)^{1/2} \\
& \left. + \left(\sum_{n=0}^{n_T-1}\sum_{i=1}^{n_x}\sum_{j=1}^{n_y}\left(\frac{\Delta t^n}{\Delta y_j}\beta^{n+}_{2,i,j-1/2}\right)^2 |u^n_{i,j} - u^n_{i,j-1}|^2\Delta x_i\Delta y_j\right)^{1/2}\right\} \\
& + \frac{1}{2}u^\star \max\{1, u^\star - 1\}\Delta t||\varphi_t||_{L^\infty(J\times\Omega)}T \\
& + (2u^\star + |c|)u^\star \max\{1, u^\star - 1\}\Delta t||\varphi||_{L^\infty(J\times\Omega)}T \\
& + (2u^\star + |c|)\max\{1, u^\star - 1\}\Delta t||\varphi_t||_{L^\infty(J\times\Omega)}T \\
& + 2(2u^\star + |c|)\max\{1, u^\star - 1\}\Delta t||\varphi||_{L^\infty(J\times\Omega)},
\end{aligned}
$$

which together with Theorem 3.2 implies the second inequality of the theorem. □

We are now in a position to prove Theorem 3.3.

Proof. From Lemma 6.1 there exists a subsequence $\{(u_{h'}, \beta_{h'}, \phi_{h'})\}_{h'>0}$ converging (in the topology in Theorem 3.3) to a limit (u, β, ϕ) satisfying (3.9b)-(3.9c). Now, by Lemma 6.6 and (3.10), we have

$$\lim_{h'\to 0} \Theta(u_{h'}, c; \beta_{h'}; \varphi) \le 0,$$

for every $c \in \mathbb{R}$ and nonnegative $\varphi \in C^1(\overline{J} \times \overline{\Omega})$. Thus, by Lemma 6.2, we see that

$$\lim_{h'\to 0} \Theta(u_{h'}, c; \beta_{h'}; \varphi) = \Theta(u, c; \beta; \varphi) \le 0.$$

This implies that (u, β, ϕ) is the unique solution of (3.9). Consequently, the whole sequence $\{(u_h, \beta_h, \phi_h)\}_{h>0}$ converges to (u, β, ϕ), and thus Theorem 3.3 is proven. □

7. Numerical results. In the section, we shall present numerical results for a two-dimensional simulation of an MOS-transistor in order to demonstrate the qualitative behavior of the solution of the differential model and to give an indication of the performance of the finite element method presented in §2. The domain Ω is of the size 0.6×0.2, the Dirichlet boundary segments are of the form

$$
\begin{aligned}
\partial\Omega_D = & \{(x, y):\ 0 < x < 0.1,\ y = 0.2\} \cup \{(x, y):\ 0.2 < x < 0.4,\ y = 0.2\} \\
& \cup \{(x, y):\ 0.5 < x < 0.6,\ y = 0.2\},
\end{aligned}
$$

and all the other parts of the boundary are the Neumann segments. The three parts of $\partial\Omega_D$ represent the source, the gate, and the drain, respectively; see Figure 1. The boundary and initial data are chosen based on numerical and physical considerations; they may not be physically adequate. However, they are sufficient to illustrate important structures of the solution and features of the numerical method.

We apply the following doping in the right-hand side of the equation (1.5a):

$$C = \begin{cases} 3 \times 10^2, & (x,y) \in [0,0.1] \times [0.15,0.2] \cup [0.5,0.6] \times [0.15,0.2], \\ 1 \times 10^2, & \text{elsewhere}. \end{cases}$$

We see that the doping has abrupt junctions (see Figure 2). Letting $\phi_0 = k_b T_0 \ln(\frac{C}{n_i})/e$ with $k_b = 0.138 \times 10^{-4}$, $e = 0.1602$, $T_0 = 300$, and $n_i = 1.4 \times 10^{-5}$, the boundary potential is given by

$$\phi_D = \begin{cases} \phi_0, & (x,y) \in (0,0.1) \times \{y = 0.2\}, \\ \phi_0 - 0.8, & (x,y) \in (0.2,0.4) \times \{y = 0.2\}, \\ \phi_0 + 2, & (x,y) \in (0.5,0.6) \times \{y = 0.2\}. \end{cases}$$

Thus, the operating conditions -0.8 V bias at the gate, 0 V bias at the source, and 2 V bias at the drain are applied. The Dirichlet boundary datum for the electron concentration is

$$u_D = (C + \sqrt{C^2 + 4n_i^2})/2, \quad t \geq 0, \ (x,y) \in \partial\Omega_D.$$

Namely, thermal equilibrium is imposed on $\partial\Omega_D$ for the concentration. The initial datum is accordingly taken in the form

$$u_{\text{init}} = (C + \sqrt{C^2 + 4n_i^2})/2, \quad (x,y) \in \Omega.$$

Uniform space meshs are used for the simulation (see Figure 1). Furthermore, the CFL condition (3.6) is assumed to be satisfied in the computation. The numerical simulation results over the space mesh of points 96×32 are shown at time $T = 1$ in Figures 3-6. In the plots 3-6, we display the graphs of the electron concentration u, the potential ϕ, the horizontal electric field β_1, and the vertical field β_2, respectively. Note that, since the initial datum u_{init} is discontinuous around the junction, the transient solution u has sharp transition there. The layer structures of the concentration u and the potential ϕ are very well demonstrated in Figures 3 and 4. The peaks of the electric field in Figures 5 and 6 are due to its singularities around the intersections of the Dirichlet and Neumann segments. It can be seen from the two graphs that the electric field near the intersection points behaves like $O(|x - x_i|^{-1/2})$, where x_i are these intersection points. This is consistent with the theoretical regularity results on the solution of the differential model obtained in [17]. Cuts at y=0.175 of the concentration, potential, and electric field are displayed in Figures 7-10, respectively, for the space meches 48×16, 96×32, and 192×64. We can clearly see the convergence of our numerical method from these cuts.

8. Concluding remarks. A new finite element method for numerically solving the two-dimensional drift-diffusion model for semiconductor devices has been formulated and analyzed in this paper. The primary computational advantage of the method

is that the mixed finite element method provides an approximate electric field in the precise form needed by the discontinuous finite element method, which is local and thus fully parallelizable. The stability properties of the method and its convergence in a suitable topology have been established. Moreover, the numerical results have verified these results.

REFERENCES

[1] T. ARBOGAST AND Z. CHEN, *Implementation of mixed methods as nonconforming methods for second order elliptic problems*, submitted to Math. Comp.

[2] F. BREZZI, J. DOUGLAS, JR., AND L.D. MARINI, *Two families of mixed finite elements for second order elliptic problems*, Numer. Math., 47 (1985), pp. 217–235.

[3] Z. CHEN, *Analysis of mixed methods using conforming and nonconforming finite element methods*, RAIRO Modèl. Math. Anal. Numer., 27 (1993), pp. 9–34.

[4] Z. CHEN AND B. COCKBURN, *Error estimates for a finite element method for the drift-diffusion semiconductor device equations*, to appear in SIAM J. Numer. Anal.

[5] Z. CHEN, *Finite element analysis of the 1D full drift diffusion semiconductor model*, submitted to SIAM J. Numer. Anal.

[6] P. G. CIARLET, *The Finite Element Method for Elliptic Problems*, Amsterdam: North Holland, 1978.

[7] B. COCKBURN AND C.W. SHU, *TVB Runge-Kutta local projection discontinuous Galerkin finite element method for scalar conservation laws II: general framework*, Math. Comp., 52 (1989), pp. 411-435.

[8] B. COCKBURN AND C.W. SHU, *The Runge-Kutta local projection P^1-discontinuous Galerkin finite element method for scalar conservation laws*, M^2AN, 25 (1991), pp. 337-361.

[9] B. COCKBURN, S.Y. LIN AND C.W. SHU, *TVB Runge-Kutta local projection discontinuous Galerkin finite element method for conservation laws III: one dimensional systems*, J. Comput. Phys., 84 (1989), pp. 90–113.

[10] B. COCKBURN, S. HOU, AND C.W. SHU, *TVB Runge-Kutta local projection discontinuous Galerkin finite element method for conservation laws IV: the multidimensional case*, Math. Comp., 54 (1990), pp. 545–581.

[11] B. COCKBURN AND I. TRIANDAF, *Convergence of a finite element method for the drift diffusion semiconductor device equations*, Math. Comp., 59 (1992), pp. 383–401.

[12] B. COCKBURN AND I. TRIANDAF, *Error estimates for a finite element method for the drift diffusion semiconductor device equations: the zero-diffusion case*, to appear in Math. Comp.

[13] B. COCKBURN, F. COQUEL AND PH. LE FLOCH, *Convergence of finite volume methods for multidimensional conservation laws*, to appear SIAM J. Numer. Anal.

[14] F. COQUEL AND PH. LE FLOCH, *Convergence of finite difference schemes for conservation laws in several space dimensions: a general theory*, to appear SIAM J. Numer. Anal.

[15] R. J. DIPERNA, *Measure-valued solutions to conservation laws*, Arch. Rat. Mech. Anal, 88 (1985), pp. 223-270.

[16] J. DOUGLAS, JR. AND J. ROBERTS, *Global estimates for mixed methods for second order elliptic problems*, Math. Comp., 45 (1985), pp. 39–52.

[17] I. M. GAMBA, *Asymptotic behavior at the boundary of a semiconductor device in two-space dimensions*, to appear.

[18] L. GASTALDI AND R. NOCHETTO, *Optimal L^∞-error estimates for nonconforming and mixed finite element methods of lowest order*, Numer. Math., 50 (1987), pp. 587–611.

[19] D. GILBERG AND N. S. TRUDINGER, *Elliptic Partial Differential Equations of Second Order, 2nd ed.*, Berlin-Heidelberg-New York: Springer, 1984.

[20] S. N. KRUZKOV, *First order quasilinear equations in several independent variables*, Math. USSR Sbornik, 10 (1970), pp. 217–243.

[21] A. Y. LEROUX, *Etude du problèm mixte pour une equation quasilinéaire du premier ordre*, C. R. Acad. Sci. Paris, Série A, t. 285 (1977), pp. 351–354.

[22] P. A. MARKOWICH AND P. SZMOLYAN, *A system of convection-diffusion equations with small diffusion coefficient arising in semiconductor physics*, Preprint.

[23] P.A. RAVIART AND J.M. THOMAS, *A mixed finite element method for second order elliptic problems*, Lecture Notes in Mathematics, Springer-Verlag, 1977.

[24] R. SANDERS, *On convergence of monotone finite difference schemes with variable spatial differencing*, Math. Comp., 40 (1983), pp. 91–106.

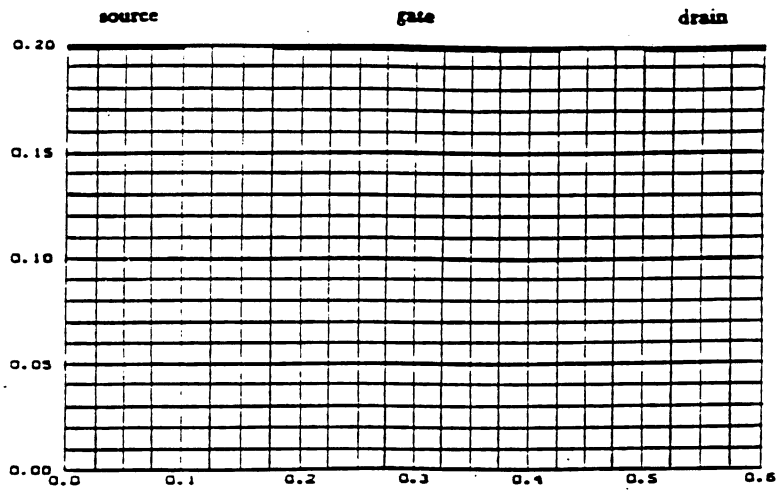

FIG. 1. The uniform mesh.

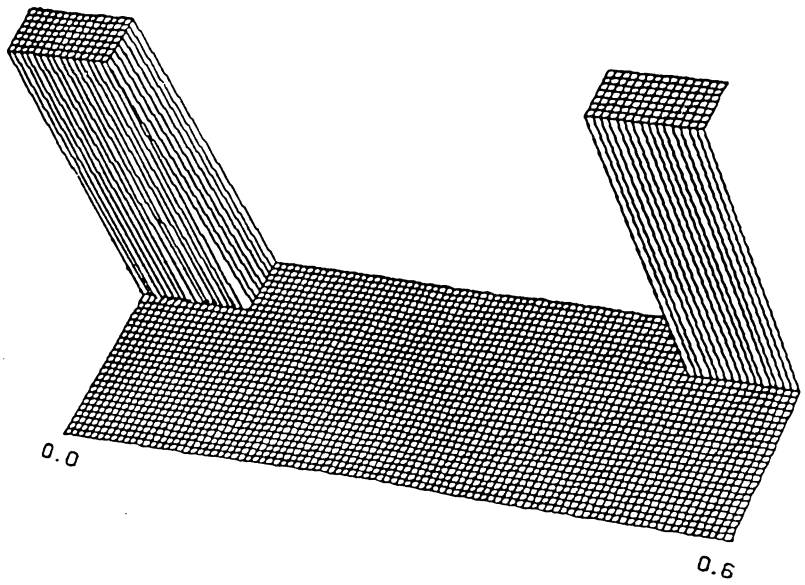

FIG. 2. The doping profile C.

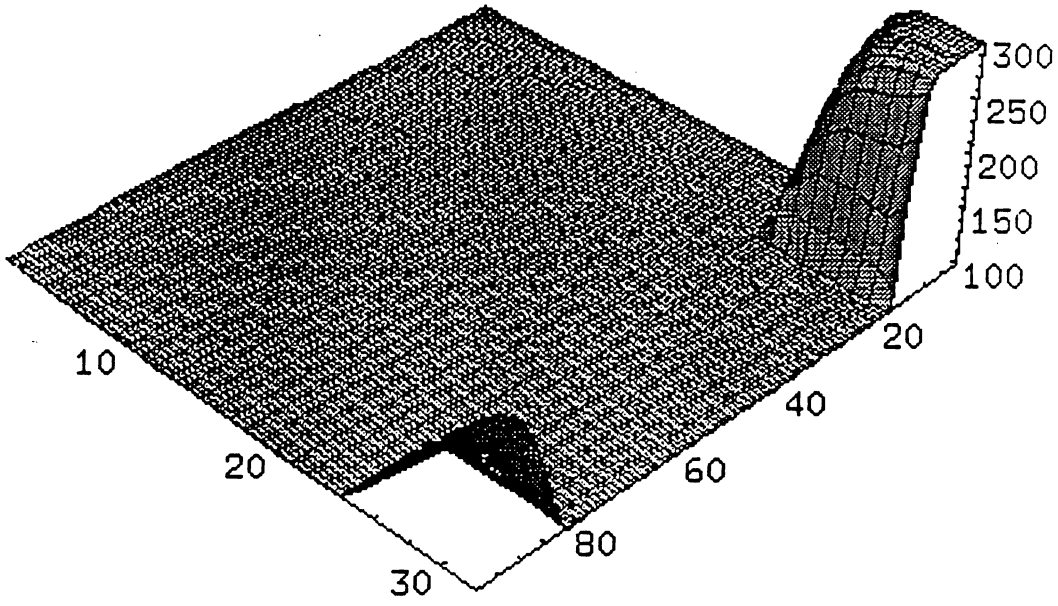

FIG. 3. The electron concentration u_h.

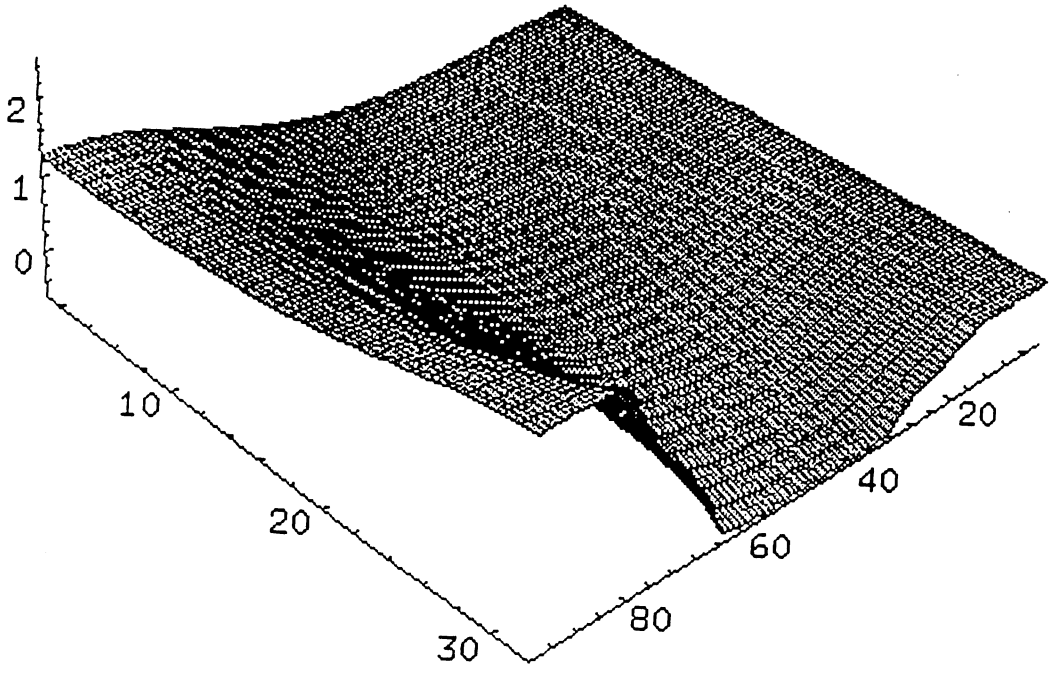

FIG. 4. The potential ϕ_h.

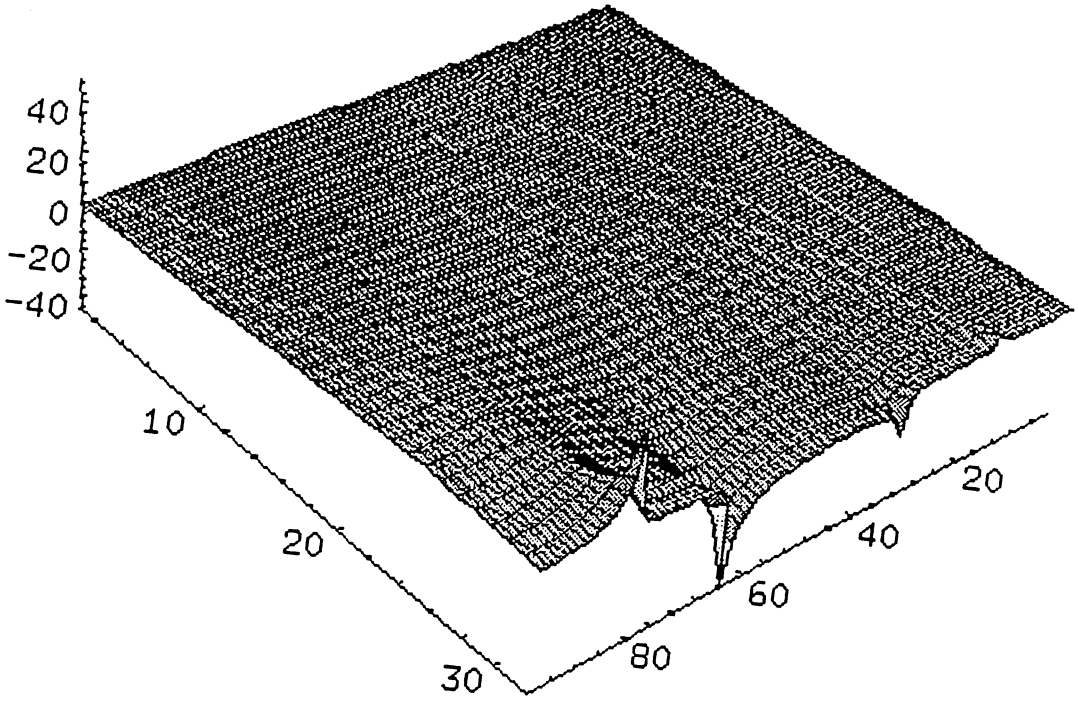

FIG. 5. The horizontal electric field $\beta_{1,h}$.

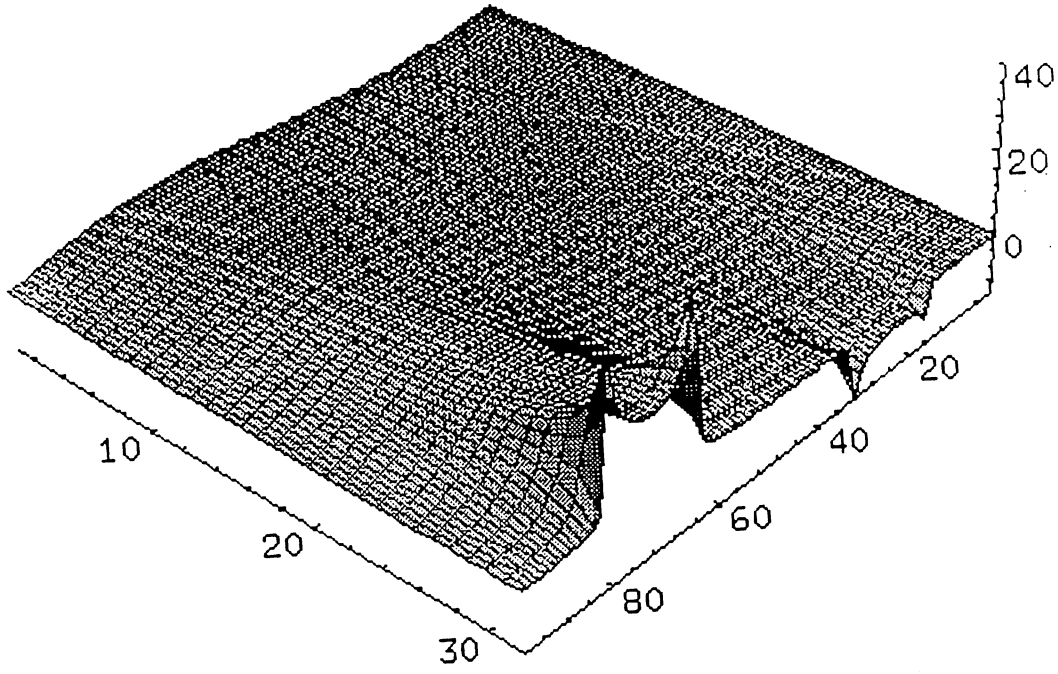

FIG. 6. The vertical electric field $\beta_{2,h}$.

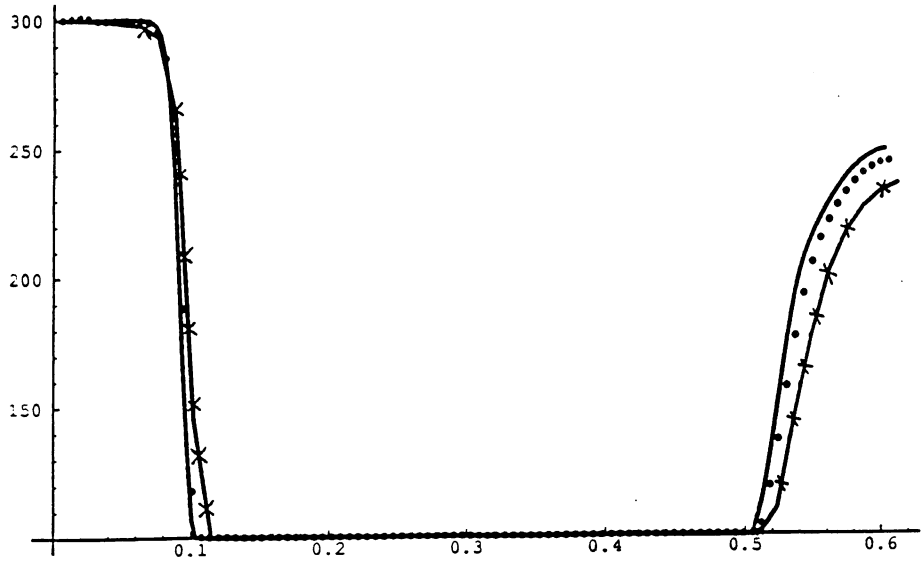

FIG. 7. Cuts of concentration at $y = .175$.
(−x−: 48 x 16, ···: 96 x 32, —: 192 x 64)

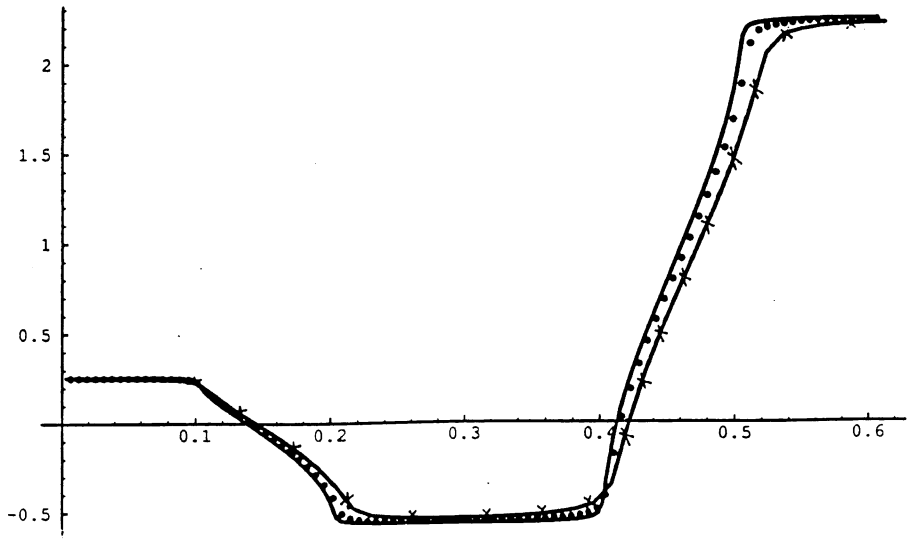

FIG. 8. Cuts of potential at $y = .175$.
(−x−: 48 x 16, ···: 96 x 32, —: 192 x 64)

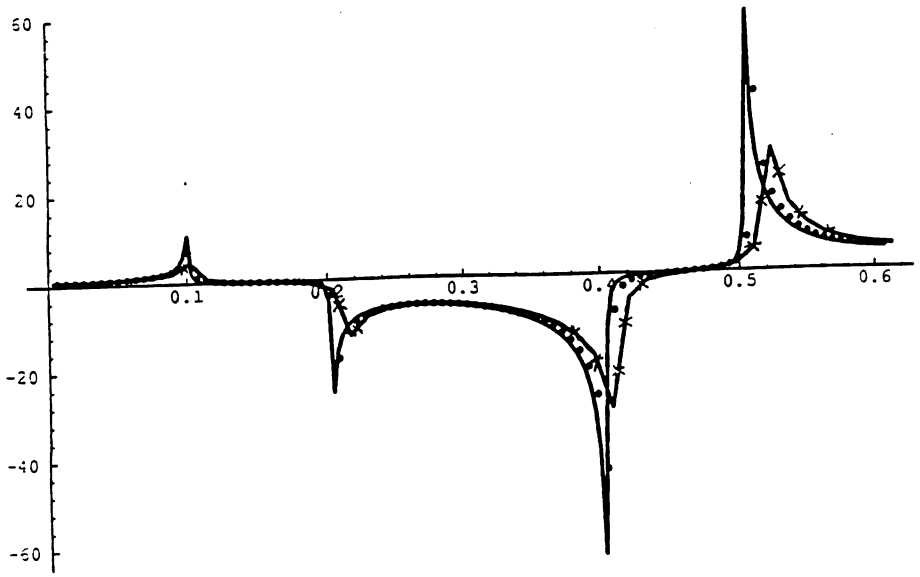

FIG. 9. Cuts of horizontal electric field at $y = .175$.
(–x–: 48 x 16, ···: 96 x 32, —: 192 x 64)

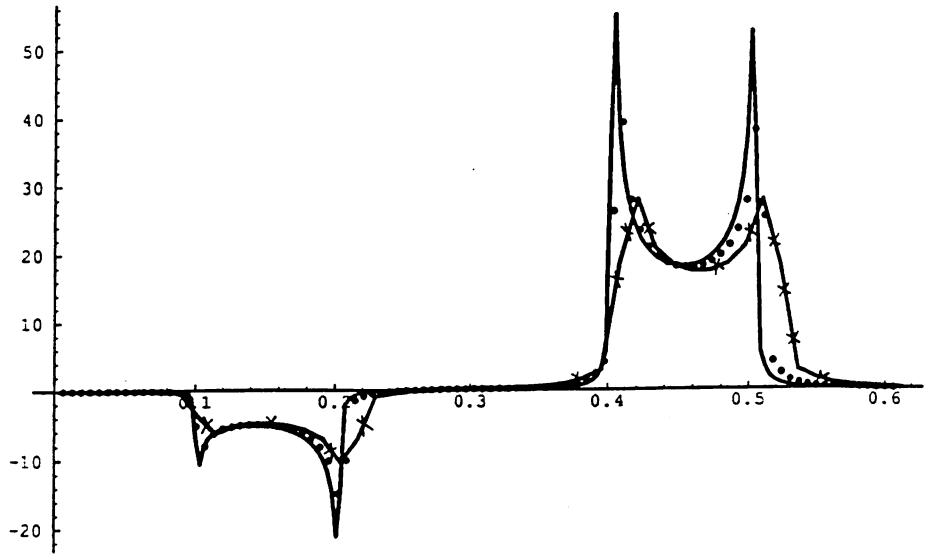

FIG. 10. Cuts of vertical electric field at $y = .175$.
(–x–: 48 x 16, ···: 96 x 32, —: 192 x 64)

Recent IMA Preprints

#	Author/s	Title
1090	**Tongwen Chen & Li Qiu**,	$\mathcal{H}_\infty$ design of general multirate sampled-data control systems
1091	**Satyanad Kichenassamy & Walter Littman**,	Blow-up surfaces for nonlinear wave equations, I
1092	**Nahum Shimkin**,	Asymptotically efficient adaptive strategies in repeated games, Part I: certainty equivalence strategies
1093	**Caroline Fabre, Jean-Pierre Puel & Enrique Zuazua**,	On the density of the range of the semigroup for semilinear heat equations
1094	**Robert F. Stengel, Laura R. Ray & Christopher I. Marrison**,	Probabilistic evaluation of control system robustness
1095	**H.O. Fattorini & S.S. Sritharan**,	Optimal chattering controls for viscous flow
1096	**Kathryn E. Lenz**,	Properties of certain optimal weighted sensitivity and weighted mixed sensitivity designs
1097	**Gang Bao & David C. Dobson**,	Second harmonic generation in nonlinear optical films
1098	**Avner Friedman & Chaocheng Huang**,	Diffusion in network
1099	**Xinfu Chen, Avner Friedman & Tsuyoshi Kimura**,	Nonstationary filtration in partially saturated porous media
1100	**Walter Littman & Baisheng Yan**,	Rellich type decay theorems for equations $P(D)u = f$ with f having support in a cylinder
1101	**Satyanad Kichenassamy & Walter Littman**,	Blow-up surfaces for nonlinear wave equations, II
1102	**Nahum Shimkin**,	Extremal large deviations in controlled I.I.D. processes with applications to hypothesis testing
1103	**A. Narain**,	Interfacial shear modeling and flow predictions for internal flows of pure vapor experiencing film condensation
1104	**Andrew Teel & Laurent Praly**,	Global stabilizability and observability imply semi-global stabilizability by output feedback
1105	**Karen Rudie & Jan C. Willems**,	The computational complexity of decentralized discrete-event control problems
1106	**John A. Burns & Ruben D. Spies**,	A numerical study of parameter sensitivities in Landau-Ginzburg models of phase transitions in shape memory alloys
1107	**Gang Bao & William W. Symes**,	Time like trace regularity of the wave equation with a nonsmooth principal part
1108	**Lawrence Markus**,	A brief history of control
1109	**Richard A. Brualdi, Keith L. Chavey & Bryan L. Shader**,	Bipartite graphs and inverse sign patterns of strong sign-nonsingular matrices
1110	**A. Kersch, W. Morokoff & A. Schuster**,	Radiative heat transfer with quasi-monte carlo methods
1111	**Jianhua Zhang**,	A free boundary problem arising from swelling-controlled release processes
1112	**Walter Littman & Stephen Taylor**,	Local smoothing and energy decay for a semi-infinite beam pinned at several points and applications to boundary control
1113	**Srdjan Stojanovic & Thomas Svobodny**,	A free boundary problem for the Stokes equation via nonsmooth analysis
1114	**Bronislaw Jakubczyk**,	Filtered differential algebras are complete invariants of static feedback
1115	**Boris Mordukhovich**,	Discrete approximations and refined Euler-Lagrange conditions for nonconvex differential inclusions
1116	**Bei Hu & Hong-Ming Yin**,	The profile near blowup time for solution of the heat equation with a nonlinear boundary condition
1117	**Jin Ma & Jiongmin Yong**,	Solvability of forward-backward SDEs and the nodal set of Hamilton-Jacobi-Bellman Equations
1118	**Chaocheng Huang & Jiongmin Yong**,	Coupled parabolic and hyperbolic equations modeling age-dependent epidemic dynamics with nonlinear diffusion
1119	**Jiongmin Yong**,	Necessary conditions for minimax control problems of second order elliptic partial differential equations
1120	**Eitan Altman & Nahum Shimkin**,	Worst-case and Nash routing policies in parallel queues with uncertain service allocations
1121	**Nahum Shimkin & Adam Shwartz**,	Asymptotically efficient adaptive strategies in repeated games, part II: Asymptotic optimality
1122	**M.E. Bradley**,	Well-posedness and regularity results for a dynamic Von Kármán plate
1123	**Zhangxin Chen**,	Finite element analysis of the 1D full drift diffusion semiconductor model
1124	**Gang Bao & David C. Dobson**,	Diffractive optics in nonlinear media with periodic structure
1125	**Steven Cox & Enrique Zuazua**,	The rate at which energy decays in a damped string
1126	**Anthony W. Leung**,	Optimal control for nonlinear systems of partial differential equations related to ecology
1127	**H.J. Sussmann**,	A continuation method for nonholonomic path-finding problems
1128	**Yung-Jen Guo & Walter Littman**,	The null boundary controllability for semilinear heat equations
1129	**Q. Zhang & G. Yin**,	Turnpike sets in stochastic manufacturing systems with finite time horizon
1130	**I. Györi, F. Hartung & J. Turi**,	Approximation of functional differential equations with time- and state-dependent delays by equations with piecewise constant arguments

1131 **I. Györi, F. Hartung & J. Turi**, Stability in delay equations with perturbed time lags
1132 **F. Hartung & J. Turi**, On the asymptotic behavior of the solutions of a state-dependent delay equation
1133 **Pierre-Alain Gremaud**, Numerical optimization and quasiconvexity
1134 **Jie Tai Yu**, Resultants and inversion formula for N polynomials in N variables
1135 **Avner Friedman & J.L. Velázquez**, The analysis of coating flows in a strip
1136 **Eduardo D. Sontag**, Control of systems without drift via generic loops
1137 **Yuan Wang & Eduardo D. Sontag**, Orders of input/output differential equations and state space dimensions
1138 **Scott W. Hansen**, Boundary control of a one-dimensional, lienar, thermoelastic rod
1139 **Robert Lipton & Bogdan Vernescu**, Homogenization of two phase emulsions with surface tension effects
1140 **Scott Hansen & Enrique Zuazua**, Exact controllability and stabilization of a vibrating string with an interior point mass
1141 **Bei Hu & Jiongmin Yong**, Pontryagin Maximum principle for semilinear and quasilinear parabolic equations with pointwise state constraints
1142 **Mark H.A. Davis**, A deterministic approach to optimal stopping with application to a prophet inequality
1143 **M.H.A. Davis & M. Zervos**, A problem of singular stochastic control with discretionary stopping
1144 **Bernardo Cockburn & Pierre-Alain Gremaud**, An error estimate for finite element methods for scalar conservation laws
1145 **David C. Dobson & Fadil Santosa**, An image enhancement technique for electrical impedance tomography
1146 **Jin Ma, Philip Protter, & Jiongmin Yong**, Solving forward-backward stochastic differential equations explicitly — a four step scheme
1147 **Yong Liu**, The equilibrium plasma subject to skin effect
1148 **Ulrich Hornung**, Models for flow and transport through porous media derived by homogenization
1149 **Avner Friedman, Chaocheng Huang, & Jiongmin Yong**, Effective permeability of the boundary of a domain
1150 **Gang Bao**, A uniqueness theorem for an inverse problem in periodic diffractive optics
1151 **Angelo Favini, Mary Ann Horn,& Irena Lasiecka**, Global existence and uniqueness of regular solutions to the dynamic von Kármán system with nonlinear boundary dissipation
1152 **E.G. Kalnins & Willard Miller, Jr.**, Models of q-algebra representations: q-integral transforms and "addition theorems"
1153 **E.G. Kalnins, V.B. Kuznetsov & Willard Miller, Jr.**, Quadrics on complex Riemannian spaces of constant curvature, separation of variables and the Gaudin magnet
1154 **A. Kersch, W. Morokoff & Chr. Werner**, Selfconsistent simulation of sputtering with the DSMC method
1155 **Bing-Yu Zhang**, A remark on the Cauchy problem for the Korteweg-de Vries equation on a periodic domain
1156 **Gang Bao**, Finite element approximation of time harmonic waves in periodic structures
1157 **Tao Lin & Hong Wang**, Recovering the gradients of the solutions of second-order hyperbolic equations by interpolating the finite element solutions
1158 **Zhangxin Chen**, L^p-posteriori error analysis of mixed methods for linear and quasilinear elliptic problems
1159 **Todd Arbogast & Zhangxin Chen**, Homogenization of compositional flow in fractured porous media
1160 **L. Qiu, B. Bernhardsson, A. Rantzer, E.J. Davison, P.M. Young & J.C. Doyle**, A formula for computation of the real stability radius
1161 **Maria Inés Troparevsky**, Adaptive control of linear discrete time systems with external disturbances under inaccurate modelling: A case study
1162 **Petr Klouček & Franz S. Rys**, Stability of the fractional step Θ-scheme for the nonstationary Navier-Stokes equations
1163 **Eduardo Casas, Luis A. Fernández & Jiongmin Yong**, Optimal control of quasilinear parabolic equations
1164 **Darrell Duffie, Jin Ma & Jiongmin Yong**, Black's consol rate conjecture
1165 **D.G. Aronson & J.L. Vazquez**, Anomalous exponents in nonlinear diffusion
1166 **Ruben D. Spies**, Local existence and regularity of solutions for a mathematical model of thermomechanical phase transitions in shape memory materials with Landau-Ginzburg free energy
1167 **Pu Sun**, On circular pipe Poiseuille flow instabilities
1168 **Angelo Favini, Mary Ann Horn, Irena Lasiecka & Daniel Tataru**, Global existence, uniqueness and regularity of solutions to a Von Kármán system with nonlinear boundary dissipation
1169 **A. Dontchev, Tz. Donchev & I. Slavov**, On the upper semicontinuity of the set of solutions of differential inclusions with a small parameter in the derivative
1170 **Jin Ma & Jiongmin Yong**, Regular-singular stochastic controls for higher dimensional diffusions — dynamic programming approach
1171 **Alex Solomonoff**, Bayes finite difference schemes
1172 **Todd Arbogast & Zhangxin Chen**, On the implementation of mixed methods as nonconforming methods for second order elliptic problems
1173 **Zhangxin Chen & Bernardo Cockburn**, Convergence of a finite element method for the drift-diffusion semiconductor device equations: The multidimensional case
1174 **Boris Mordukhovich**, Optimization and finite difference approximations of nonconvex differential inclusions with free time