Slope Morphology of Icelandic Fuglaþúfur

Brittany Hoover
Swenson College of Science and Engineering
University of Minnesota Duluth
engst240@d.umn.edu

UROP Faculty Advisor
Dr. Howard Mooers
Department of Earth and Environmental Sciences
Swenson College of Science and Engineering
University of Minnesota Duluth
hmooers@d.umn.edu

Fuglaþúfur are unique Icelandic hills with apex tussock growth enhanced by fertilization from bird feces. These features are found all along the Icelandic coast but their frequency drops off with increasing distance from the ocean. Fuglaþúfur stabilize and armor hill tops, strongly influencing hillslope evolution. The goal of this investigation was to identify patterns and scales of fuglaþúfur on different substrates and to evaluate their role in insulating slopes from freeze/thaw erosional processes, controlling slope stability. Fuglaþúfur were grouped topographically into three broad categories: glacial moraines, coastal sand dunes, and old lava flows. Size and shape of the fuglaþúfur were recorded by surveying topographic profiles and vegetation thickness. To evaluate insulating characteristics, soil temperature was measured with custom-built thermistor arrays. Thermistors have an accuracy of 0.1 °C and were mounted in 1" ID PVC tubes using a parallel, 3-wire half-bridge configuration. Thermistors were mounted on wooden dowels and inserted into 1" diameter PVC tubing. The arrays were secured in place with expanding insulating foam and sealed with epoxy. The probes were placed in holes drilled in the fuglaþúfur apex and in the unprotected, south-facing slope. Holes were backfilled after emplacement, connected to Campbell Scientific dataloggers, and recorded for four days.

Fuglaþúfur vary significantly with age and substrate. Tussocks on older geomorphic surfaces have distinct densely-packed, thick vegetation with a tall conical shape and a small depression in the center at the top. The second type of fuglaþúfur is found on unsorted sediments of glacial moraines that date to the Little Ice Age maximum, which makes them less than 150 years old. Here they tend to have a much thinner, broader vegetated apex and are more closely-spaced than those on older surfaces. The third type of fuglaþúfur develops on ephemeral features such as well-sorted sand dunes found commonly on strandplains. These tussocks are usually the longest, widest and thickest. Time series data of temperature fluctuations clearly show that fuglaþúfur have an insulating effect on freeze/thaw cycles.

1. Introduction

Fuglaþúfur are a poorly-documented, unique feature of Icelandic landscape. Roughly translated, the Icelandic name means bird tussock and the only literature references are those of Gunnarsson (2009) and Larson and Mooers (2013). However, similar features have been described at Aneou in the western Pyrenees (Verbeek and Boasson, 1984). Ground-nesting birds sit preferentially on topographic highs as a vantage/nesting point and fertilize the hill apexes beneath (Gunnarsson, 2009). The fuglaþúfur are formed from bird excrement fertilizing the hilltops, which in turn armors the apex with vegetation and prevents erosion. This causes an unusual convex þúfur top which becomes concave with the transition from þúfur to regular hillslope, and regular convex shape at the hills base as in a normal slope (Larson and Mooers, 2013). The hill tussock creates a positive feedback cycle, where the taller the þúfur, the better vantage point, causing more birds to sit there and supply more fertilization for vegetation.

The goal of this research was to find patterns to categorize the fuglaþúfur and to confirm the effects of slope-armoring vegetation on the hilltop. This was accomplished by surveying a variety of hills and observing differences in diurnal temperature variations in the þúfur vs. the unprotected slope. Vegetation thickness is related to slope insulation and protection, where temperature measurements will likely show the important insulating factors that affect the hillslopes.

Fuglaþúfur are found all along the Icelandic coast but their frequency drops off with distance from the coast. Surveys were conducted in three areas on the south side island that were promising to possible variations. The first was in the Breiðamerkurjökull terminal moraine with þúfur on unsorted sediments. The second area was across the road on sand dunes of a strandplain. The third was to the east on an old lava flow near Höfn in SE Iceland.

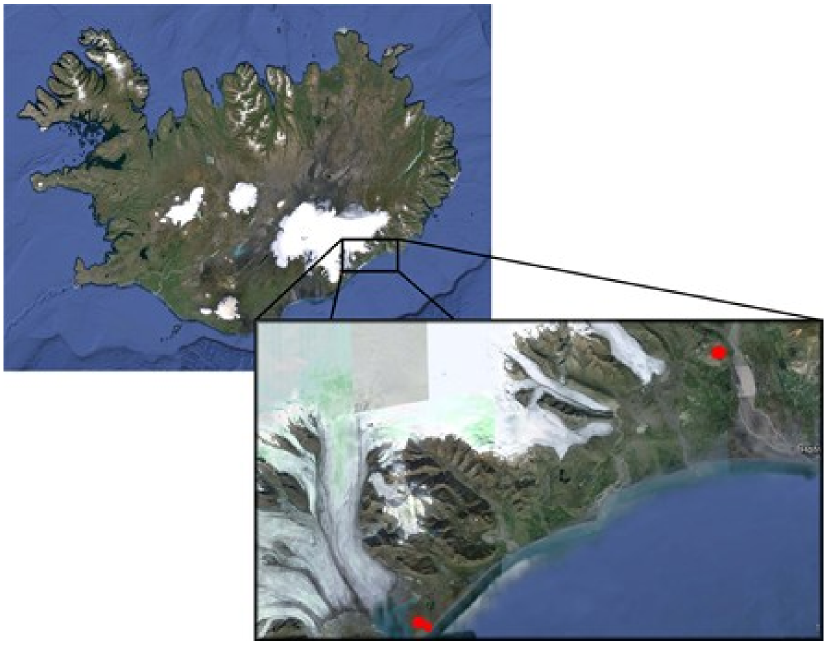

Figure 1. Study areas shown in red dots. The fuglaþúfur on the outwash moraine of Breiðamerkurjökull are found to the west and north of the road. Those on sand dunes are across the street on the strandplain. The third site sampled is to the east near Höfn.

Figure 2. An example of a fuglaþúfur growing on an old lava flow. Photo taken near Höfn.

2. Materials

To build a thermistor array: 1” PVC, ½” wooden dowels, 1” plastic conduit box, 15 pin ribbon cable, 2 part epoxy, expanding insulating foam, serial ports (4), 10kΩ NTC thermistors (8) PN: 480-313-ND, 10kΩ precision resistor (8) PN: PTF56, dual general-purpose IC PC board PN: 276-159B.

To collect data: dataloggers (I had a Campbell Scientific CR1000 and CR10x), 12V lead-acid battery (2), optical isolator, 9 pin ribbon cable.

To survey: 1.5 m broom handle (2), carpenter’s ruler, 5-lb sledge hammer, 1 m rebar, measuring tape, hand level.

3. Methods

The data were collected from surveying and from the temperature probes.

Surveying: A hand level and carpenter’s ruler were attached to broom handles, and the hand level was in a fixed position perpendicular to fuglaþúfur long axis. The cross section was surveyed over a distance of 60 to 500 cm, depending on þúfur size. Measurements extended to about 0.8m on either side of the þúfur. The steepest slopes on the edges of the tussocks were measured at closer intervals. Long axis, short axis, and circumference were also recorded. Thickness was measured by pounding rebar into the þúfur until the substrate was hit at the same interval as the topographic survey. For þúfur on sand, thickness measurements were found by measuring the height of the draping vegetation (external) over the hill because the contact between vegetation and sand was not noticeable when pounding in the rebar.

Temperature measurement: Soil temperature was measured with two custom-built thermistor arrays. Thermistors have an accuracy of 0.1 °C and were mounted in 1” ID PVC tubes using a parallel configuration as a 3-wire half bridge system (Figure 3). Eight thermistors for each probe were first mounted on a wooden dowel from the top to 50 cm, which was then inserted into the PVC. The dowels were secured in place with expanding insulating foam and the ends sealed with epoxy. The arrays were used to measure soil diffusivity with depth in the two locations. The data were recorded with two individually programmed Campbell Scientific dataloggers (CR10x and CR1000). The probes were placed in holes drilled in the fuglaþúfur apex and in the unprotected, south-facing slope. Holes were backfilled after emplacement, connected to the dataloggers, and recorded for four days. Raw measurements were recorded as output voltage with respect to the excitation channel (Equation 1) and converted to temperature in Excel after all the data were collected.

4. Calculations

Method of calculating temperature-dependent voltage from thermistors are shown in Equations 1, 2 and 3 (Alexander and Sadiku. 2007). Raw data were recorded as the ratio of output voltage to input voltage with an excitation channel at 250 mV. The transfer equation was rearranged to calculate thermistor resistance, which was placed in the Steinhart-Hart equation to get temperature.

$$H_1 = \frac{V_{out}}{V_{in}} = \frac{TH_1}{R_1 + TH_1}$$

Equation 1. The transfer function applied to each thermistor/resistor in series. This is the ratio of the voltage divider based on Ohm’s Law.

$$V_{out} = H_{1(volts)} = \left(\frac{TH_{1(ohms)}}{TH_1 + R_1}\right)E_1$$

$$(TH_1)(H_1) + (R_1)(H_1) = (TH_1)(E_1)$$

$$TH_1(H_1 - E_1) = -R_1(H_1)$$

$$TH_{1(ohms)} = \left(\frac{(R_1)(H_1)}{E_1 - H_1}\right)$$

Equation 2. Calculating thermistor resistance (ohms) from the transfer function, needed to calculate temperature.

$$T_{(\deg C)} = \frac{1}{A + B(\ln R) + C(\ln R)^3} - 273.15$$

Equation 3. The Steinhart-Hart equation used to calculate temperature from thermistor ohms. A, B and C are specific temperature-dependent resistance coefficients given from the datasheet for the specific thermistors used.

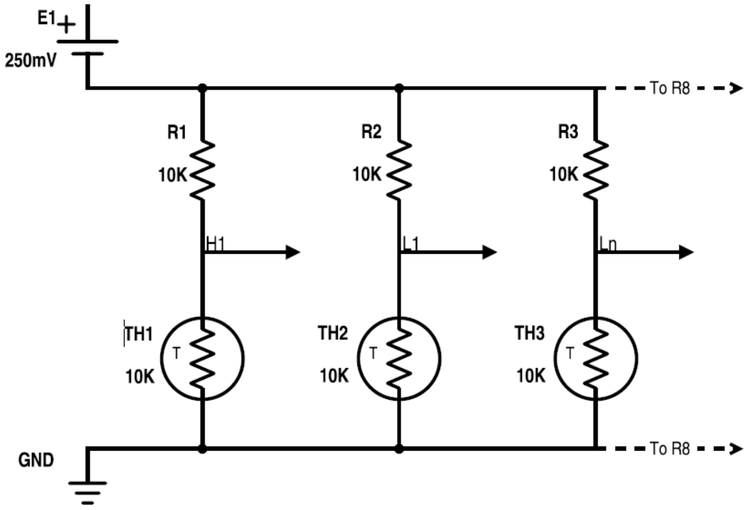

Figure 3. Schematic of thermistor arrays. The entire array was wired in parallel with a 3-wire half bridge system used as a voltage divider to get an output voltage that varies with temperature. Since the thermistors have a negative temperature coefficient (NTC), resistance decreases with increasing temperature and raw voltage measurements were inversely proportional to temperature. Final design by Professor Scott Norr, UMD Electrical Engineering Department, and Schematic drawn by of Jacob Hoover.

5. Results

Three main types of fuglaþúfur were found from surveys performed on various shapes and sizes of þúfur in areas of promising systematic differences.

The first type of þúfur is found on old lava flows and other bedrock surfaces, typically older than 200 years from lava and bedrock age dates. Tussocks here have distinct densely-packed, thick vegetation of a tall, conical shape with an unusual dip in the center at the top that usually sprung back when sampled for thickness with the rebar. They have smaller length, width and circumference and tend to have a large spacing between each one. Their cross-sectional comparisons are found as Type 1 in Figure 6. The second type of þúfur is found on unsorted sediments of glacial moraines that date to the Little Ice Age maximum, making them less than 150 years old. The area sampled for these þúfur was in the moraines of Breiðamerkurjökull (the furthest NW dot in Figure 1). This kind tends to have a much thinner vegetated apex, more flattened out, and closely-spaced than those on old lava flows (Type 2 in Figure 6). Temperature variations were found in these þúfur on glacial outwash as it was the ideal candidate for success in drilling into the þúfur and unprotected slope while also getting a large temperature variation. The third type of þúfur grows on well-sorted sand dunes mainly on shore strandplains. These tussocks are usually the longest, widest and thickest. However, thickness measurements were taken as external þúfur “draping” height because the horizon between vegetation and sandy substrate wasn’t noticeable when pounding in rebar to find thickness (Type 3 in Figure 6). This type tended to drape far over the hill and was greatly eroded beneath the vegetated apex. The differences between the three types of fuglaþúfur are best-represented in the survey profiles of Figure 6.

Diurnal temperature variations are shown in Figure 5, where the fluctuation in air temperature is similar at the hill apex and unprotected downslope, but the insulated slope gradually becomes about 3 °C colder and has a smaller temperature variation with increasing depth.

Figure 4. Picture of the thermistor arrays placed in the fuglaþúfur apex and unprotected south-facing slope in a Breiðamerkurjökull moraine. They recorded for four days at eight depths ranging from just above ground to 50 cm.

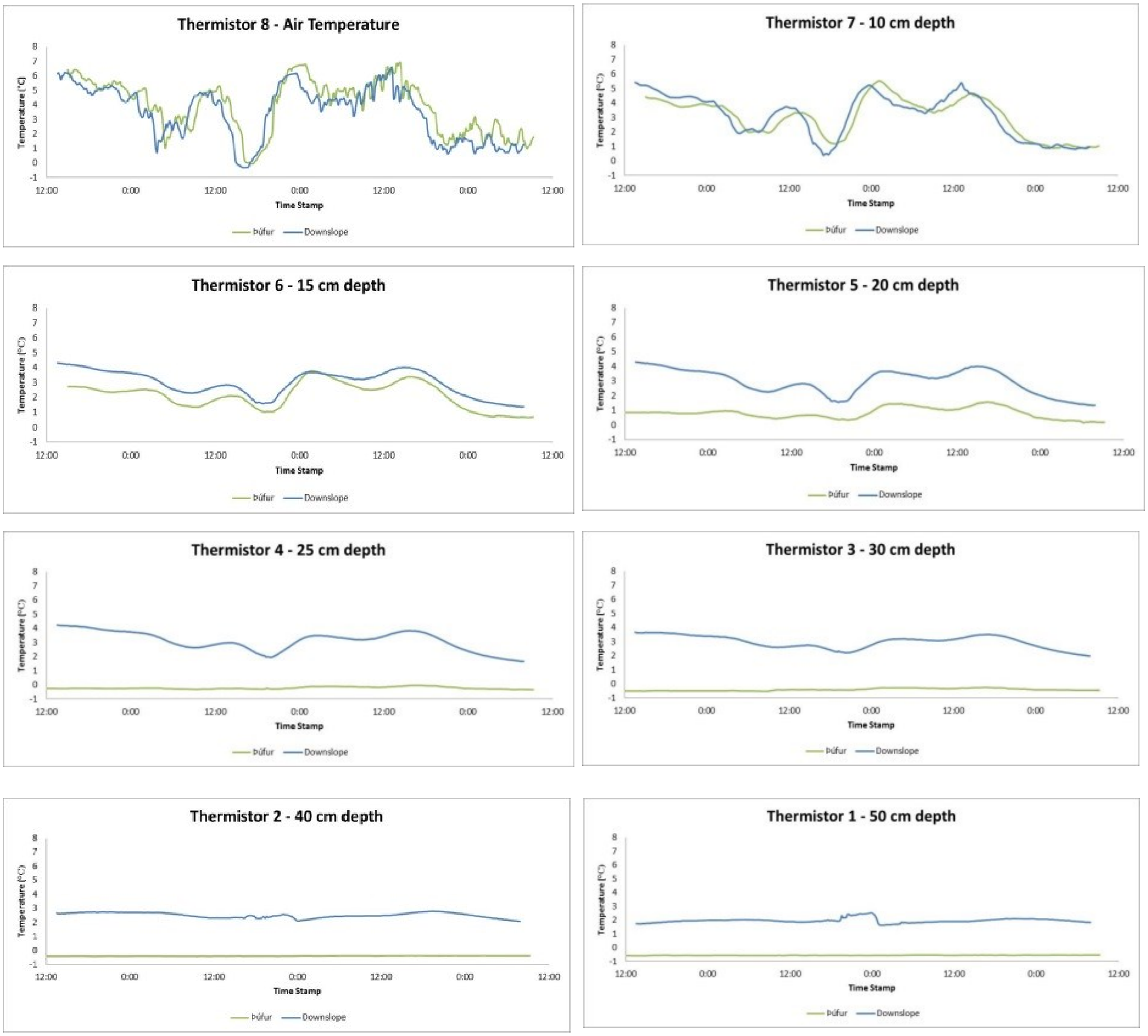
Thermistor 8 - Air Temperature

Thermistor 7 - 10 cm depth

Thermistor 6 - 15 cm depth

Thermistor 5 - 20 cm depth

Thermistor 4 - 25 cm depth

Thermistor 3 - 30 cm depth

Thermistor 2 - 40 cm depth

Thermistor 1 - 50 cm depth

Figure 5. Diurnal temperature variations in the þúfur (shown in green) and on the unprotected slope (in blue). Temperature (in °C) is on the y-axis and time of day over four days on the x-axis. There were eight thermistors in each array, ranging from air temperature measurements at the top to a depth of 50 cm. Temperatures beneath the þúfur were about 3 °C colder beginning at a depth of about 20 cm (Thermistor 5) than those at the same depth in the unprotected slope. Temperature fluctuations beneath the vegetation are also much less variable at greater depths than in the unprotected slope, which can be seen by from 20 to 50 cm depth (from Thermistors 5 to 1) for both arrays. The array downslope was placed on the sunny, south-facing side in order to see the greatest temperature variation and magnify the differences in soil diffusivity in the two locations on the fuglaþúfur.

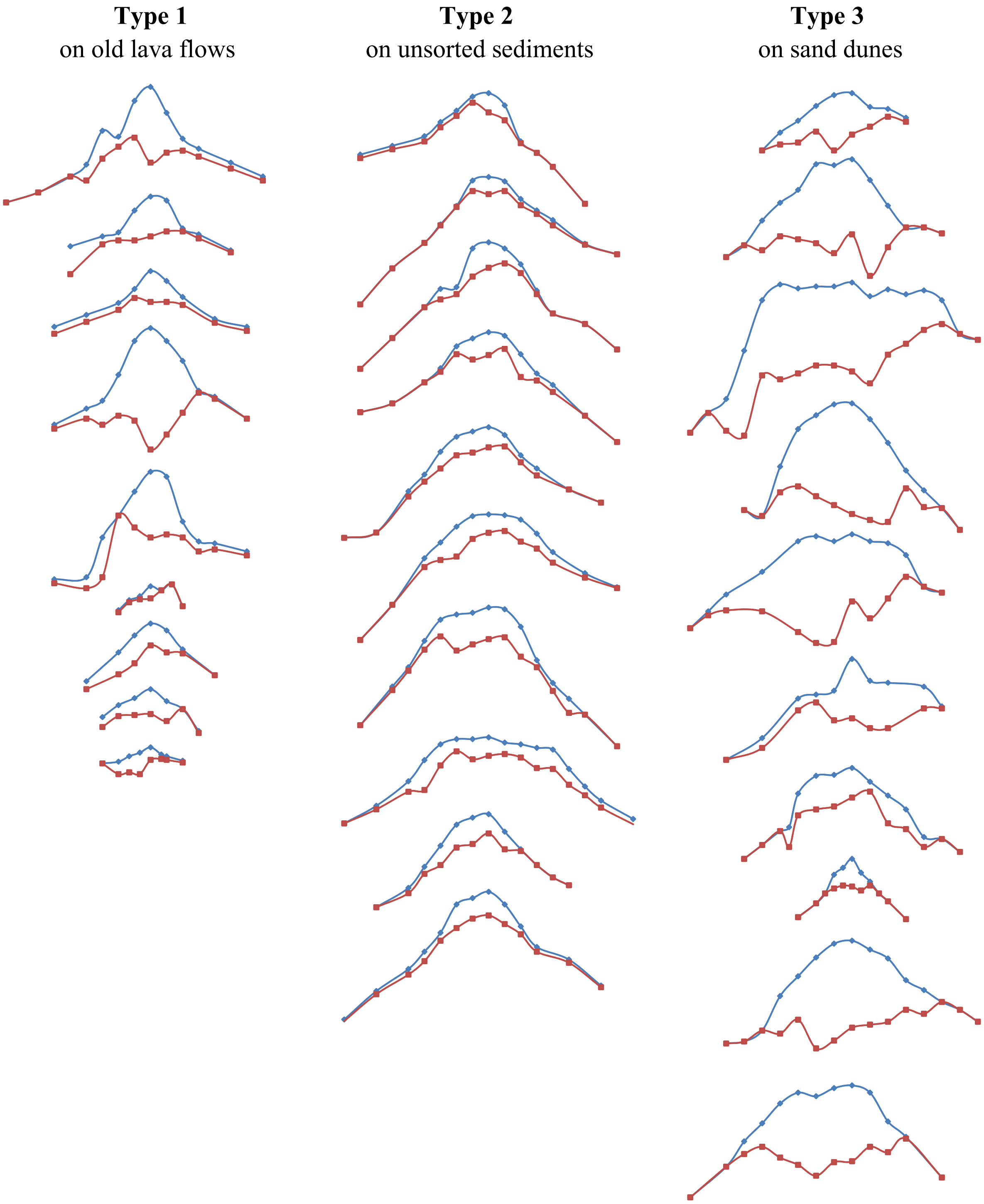

Type 1
on old lava flows

Type 2
on unsorted sediments

Type 3
on sand dunes

*Figure 6***.** Cross sections with thickness measurements from the three study areas. The blue line marks the top of the hill/tussock, and the red line is distance to the substrate. Type 1 was found to the east of the study area (Figure 1) on an old lava flow. Type 2 was found to the west of the study area in the unsorted sediments of a Breiðamerkurjökull outwash moraine north of the road. The third type

of fuglaþúfur is on sand dunes on the coast, across the road from the outwash moraine. All profiles are proportional with the same height and length scale so that morphology can be compared.

6. Discussion

Fuglaþúfur are found all along the southern coast of Iceland. Gunnarsson (2009) and Larson and Mooers (2013) have shown that the presence of þúfur decreases with distance from the coast as the density of shorebird populations decrease.

Profiles collected from surveys of three areas and illustrated in Figure 6 show that fuglaþúfur growth depends mainly on substrate, which is dominated on the Icelandic coast by unsorted moraine sediment, sand dunes, and old lava flows. The tussock develops differently in these environments because the different types of substrate have different susceptibilities to erosion. Well-sorted sand erodes more easily than does unsorted sediment from silt to cobbles, and old hard lava flows erode much more slowly than either of these deposits. Thus, the tussock grows and flattens best with the best erosion of underlying sediment: sand. When the substrate is relatively solid and erodes very slowly, such as on old lava flows, these þúfur remain tight and conical, growing upward because the base is eroding relatively very slowly beneath the vegetation. Figure 6 best shows this relationship, although the cross sections are misleading for Type 3 because the horizon between the vegetation and sand wasn't detectable when pounding the rebar into the vegetation, so "draping" vegetation thickness was estimated.

Figure 5 shows that diurnal variations in þúfur substrate are less than those on the unprotected slope. Air temperatures for the hilltop and downslope were the same, but as depth increased, temperature propagation went further and faster in the unprotected slope than beneath the vegetation, which was about 3 °C colder and had a smaller variation in temperature beginning around 20 cm deep. This confirms the armoring and insulating effects of the vegetation predicted at the beginning of this study. Physical weathering of the freeze-thaw cycle and thermal expansion are much less diffusive beneath the þúfur, impeding erosion. Heat propagates faster and further in the unprotected area than under vegetation which thermally insulates the apex. This leaves the anomalous concave apex, which transitions to convex slope on the sides of the þúfur. Then going further downhill is the morphology of a normal hill, with a convex slope in the middle to convex at the base. On a normal hill, the inflection point between the convex nose and the concave sides reflects the change from diffusion-dominated to fluvial-dominated sediment transport. Flow divergence (like sheet flow) is found on convex noses, whereas more flow convergence (channelized flow) is found in concave hollows (Bierman and Montgomery, 2014). In order to accommodate the increasing mass flux downhill, the dominant fluvial transport with increasing watershed goes from inefficient flow divergence to more efficient flow convergence, where greater amounts of water can be transported at lower slopes. When vegetation armors the hilltop sediment beneath the vegetation does not erode, which creates a steep slope at the apex that requires more efficient, channelized flow at the first inflection point on the side of the tussock due to the unusually high mass flux from the armored apex.

7. Acknowledgements

Thank you so much to Scott Norr in electrical engineering for lending me the CR1000 and for consulting through the entire process of developing the arrays, who was also the one to provide the final schematic and the two equations necessary to get thermistor ohms from the raw measurements. I would not have collected temperature data without him. To Jacob Davis from Campbell Scientific tech support, who provided the basic code for the CR1000 and was a major help in troubleshooting the other dataloggers to get them working. To my adviser, Dr. Mooers, who had the idea for this project and provided the opportunity for me to do this research. He designed the bulk of the probe structure, built most of them, and helped me to draw conclusions from data collected. Finally, thank you to my husband, Jacob Hoover for helping with all data collection and troubleshooting in Iceland, who also drew up the array schematic above. I could not have completed this project without these people.

References

Alexander, C.K. and M.N.O Sadiku. 2007. Series Resistors and Voltage Division. Pages 43-47 in *Fundamentals of Electric Circuits*, edited by M.S. Hackett. McGraw-Hill Companies, Inc., New York, NY.

Bierman, P.R. and D.R. Montgomery. 2014. Hillslopes. Pages 163-166 in *Key Concepts in Geomorphology*, edited by B. Minick and H. Bamatter. W.H. Freeman and Company Publishers, New York, NY.

Guðmundsson, A.T. 2007. A young country. Pages 366-369 in *Living Earth*, translated from Icelandic by George Douglas. Mál og menning, Reykjavík, Iceland.

Gunnarsson, T.G., 2009. Fuglaþúfur. Bliki, 30, 71-72.

Larson, P.C. and Mooers, H.D., 2013, Fuglaþúfur: avian influenced slope stability, Geological Society of America Abstracts with Programs. Vol. 45, No. 7, p.42.

Citation	Hoover, B. (2015). Slope morphology of Icelandic Fuglaþúfur. *Duluth Journal of Undergraduate Research, 2*, 51-59. Permalink: http://hdl.handle.net/10792/2655
View Statistics	