2006-19

Final Report

Quick Edge: Rapid Underbody Plow Cutting Edge Changing System

Research

Technical Report Documentation Page

1. Report No. MN/RC-2006-19	2.	3. Recipients Accession No.	
4. Title and Subtitle Quick Edge: Rapid Underbody Plow Cutting Edge Changing System		5. Report Date July 2006 6.	
7. Author(s) Michael Etheridge, Craig Shankwitz		8. Performing Organization Report No.	
9. Performing Organization Name and Address University of Minnesota Mechanical Engineering Department 1100 Mechanical Engineering 111 Church Street S.E. Minneapolis, Minnesota 55455		10. Project/Task/Work Unit No. 11. Contract (C) or Grant (G) No. (C) 81655 (wo) 115	
12. Sponsoring Organization Name and Address Minnesota Department of Transportation 395 John Ireland Boulevard Mail Stop 330 St. Paul, Minnesota 55155		13. Type of Report and Period Covered Final Report February 2004-January 2006 14. Sponsoring Agency Code	
15. Supplementary Notes http://www.lrrb.org/PDF/200619.pdf			
16. Abstract (Limit: 200 words) Much of the benefit of an underbody scraper lies in the ability to apply high levels of pressure to break up compacted ice and snow. However, this also leads to increased wear on the underbody's cutting edges and frequent replacement. This process is time and labor intensive and can often lead to a wide variety of injuries. Accordingly, the *Quick Edge Rapid Underbody Cutting Edge Changing System* was designed to simplify this difficult process and remove some of the risk involved. This report outlines the steps taken in creating the final working design and prototype.			
17. Document Analysis/Descriptors Underbody Scraper (Plow) Cutting Edges Design Improvement		18. Availability Statement No restrictions. Document available from: National Technical Information Services, Springfield, Virginia 22161	
19. Security Class (this report) Unclassified	20. Security Class (this page) Unclassified	21. No. of Pages 100	22. Price

Quick Edge:
Rapid Underbody Plow
Cutting Edge Changing System

Final Report

Prepared by:

Michael Etheridge
Craig Shankwitz

Department of Mechanical Engineering
University of Minnesota

July 2006

Published by:

Minnesota Department of Transportation
Research Services Section
395 John Ireland Boulevard, MS 330
St. Paul, Minnesota 55155-1899

This report represents the results of research conducted by the authors and does not necessarily represent the views or policies of the Minnesota Department of Transportation and/or the Center for Transportation Studies. This report does not contain a standard or specified technique.

The authors and the Minnesota Department of Transportation and/or Center for Transportation Studies do not endorse products or manufacturers. Trade or manufacturers' names appear herein solely because they are considered essential to this report

Acknowledgements

This project was a phenomenal opportunity to accelerate my engineering development and would not have been possible without the help of a great number of people. Ken Nelson provided the initial project concept and backing and to get things off the ground. Tim, Dewayne (*Dewey)* Jones, Stan Waletko, and everyone else at the Golden Valley shop were great in providing me all the resources and knowledge they had at their disposal. John Tarnowski, acting as technical liaison, coordinated the project from the Mn/DOT side of things. And of course, I'd like to give great thanks to my project advisor, Craig Shankwitz. He helped introduce me to the project, guided me along the way, volunteered his own resources when I overstepped my constraints, and was always willing to take time out of his busy schedule to review my progress. Everyone was a great help and I am thankful.

Table of Contents

Chapter 1: Introduction 1

Chapter 2: Literature Review 2

Chapter 3: Problem Definition 6

3.1: Project Conception 6

3.2: Problem Statement 6

3.3: Equipment Description 6

3.4: Problem Investigation 9

Chapter 4: Concept Generation and Selection 10

Chapter 5: Design Description 11

5.1: Modified Moldboard Assembly 12

5.2: Pin Plates 13

5.3: Hydraulic System 15

5.4: Hydraulic Supports 16

5.5: Cutting Edge Modifications 16

5.6: Description of Cutting Edge Change 17

Chapter 6: Design Evaluation 18

6.1: Supporting Analysis 18

6.1.1: Determining the Forces Acting on the Cutting Edges 18

6.1.2: Stress and Fatigue Analysis 21

6.1.2.1: General Overview of Stress Analysis 21

6.1.2.2: Cutting Edge Force Relations 22

6.1.2.3: Moldboard Strength Analysis 24

6.1.2.4: Front Plate Strength Analysis 28

6.1.2.5: Support Pin Strength Analysis 30

6.2: Prototype Construction 33

6.3: Cost Analysis 38

6.4: Testing 39

Chapter 7: Conclusions and Recommendations 40

References.....43

Appendix A: Shop Visit Survey Summary

Appendix B: Quick Edge Engineering Drawings

Appendix C: Moldboard Strength Investigation EES Code

Appendix D: Front Plate Strength Investigation EES Code

Appendix E: Support Pin Strength Investigation EES Code

Appendix F: Prototype and Final Design BOM's

List of Figures

Figure 2.1: Nixon's Explanation of Cutting Edge Angles 2
Figure 2.2: Nixon's Explanation of Blade Angle 3
Figure 3.1: Illustration of Cast Angle 7
Figure 3.2: Underbody Scraper Assembly.....7
Figure 3.3: Standard Cutting Edge Geometry (Side View) 8
Figure 3.4: Underbody Operating Positions 8
Figure 4.1: L-Shaped Pin Slots 10
Figure 5.1: Full Assembly Illustration 11
Figure 5.2: Comparison of Original and Quick Edge Moldboards.....12
Figure 5.3: Front View of Plow Assembly with Optional Curb Guards 12
Figure 5.4: Exploded Moldboard Assembly with Pin Plates.....13
Figure 5.5: Pin Type Comparison.....14
Figure 5.6: Pin Type Configuration.....14
Figure 5.7: Pin Chamfers 14
Figure 5.8: Quick Edge Hydraulic Schematic 15
Figure 5.9: Exploded View of Hydraulic Support.....16
Figure 5.10: Extra Cutting Edge Hole Placements 16
Figure 6.1: Cutting Edge Force Free-Body.....18
Figure 6.2: Graphical Trial Summary of a Trial Run 19
Figure 6.3: Graphical Representations of Four States of Fatigue.....22
Figure 6.4: Force Balance on Cutting Edges 23
Figure 6.5: Force Balance on Simplified Moldboard Model.....25
Figure 6.6: Force Balance Simplified on Front Plate Model.....28
Figure 6.7: Simplified Support Pin Loadings 31
Figure 6.8: Pin 3 End as Cantilever Beam.....31
Figure 6.9: Photo of Quick Edge Prototype.....33
Figure 6.10: Final Design and Prototype Moldboard Comparison.....34
Figure 6.11: Prototype Moldboard Mounting.....34
Figure 6.12: Test Underbody before Moldboard Replacement 35

Figure 6.13: Test Underbody without Moldboard 35
Figure 6.14: Test Underbody with Prototype Moldboard.....35
Figure 6.15: Hydraulic Power Unit Mounting.....36
Figure 6.16: Prototype Hydraulic Schematic.....37
Figure 6.17: Prototype Cylinder and Manifold Mountings 37
Figure 6.18: Prototype Cutting Edge Change 39
Figure 6.19: Test Truck Drivers with the Quick Edge Prototype 40
Figure 6.20: Quick Edge Prototype Kicking up Gravel.....40

List of Tables

Table 6.1: Mean and Alternating Force Estimates.....20
Table 6.2: Moldboard Strength Engineering Safety Factors 27
Table 6.3: Front Plate Engineering Safety Factors for Various Loading Conditions.....29
Table 6.4: Pin Engineering Safety Factors for Various Loading Conditions 32

Executive Summary

The Minnesota Department of Transportation (Mn/DOT) is responsible for ensuring that the state's roadways remain clear and safe during the harsh winter months. Fortunately, a recent emphasis on the application of scientific and engineering principles in the winter maintenance industry has led to the development of more effective equipment to aid in this task. This project is a continuation of this movement, with a focus on investigating potential design improvements to the mid-mounted underbody snowplow.

Most residents of the northern states are at least somewhat familiar with the underbody plow. These plows can be found mounted to the underbellies of the large orange trucks that appear whenever snow begins to fall. Their placement between the front and rear axles provides excellent leverage of the truck's natural weight, which in turn allows the plow to apply high pressure to the surface being scraped. This results in more effective ice removal, but also greatly increases the wear on the contact surfaces.

A majority of this wear is seen by the plow's cutting edges. The cutting edges are ¾inch hardened steel blades that are fastened to the underbody's moldboard. The curved moldboard makes up a majority of the plow's face, but is never in contact with the ground due to the cutting edges. The cutting edges are five to six inches tall, and once about half this height has been worn away, they are replaced. Although replacement of the cutting edges is significantly easier than replacing a worn or damaged moldboard, it is still no simple task.

Two or three 40-to-90 pound cutting edges are generally required to fit across the 10-to-12 foot plow length. The cutting edges are held in place with a series of 14 high-strength bolts that must be removed and then refastened as the heavy, new pieces are positioned. This process is further complicated by damaged or stripped bolts, which must be broken off with the aid of an acetylene torch and hammer. If that were not enough, a majority of the maintenance shops in Minnesota are without hydraulic truck lifts and so the entire process must be performed while crawling beneath the truck. The whole ordeal is very time and labor intensive and puts workers at risk of personal injury.

The objective of this project was to design an innovative system for attaching cutting edges to underbody plows that would allow workers to complete replacements in less time and with less threat to their safety. An initial literature review provided substantial background, with extensive experimental research coming from studies funded by the Iowa and Michigan Departments of Transportation (IDOT and MDOT, respectively). The problem statement and design objectives were then further refined after observation of maintenance procedures at the Golden Valley Mn/DOT maintenance shop.

Many design ideas were formulated, but the final concept was chosen based on qualitative analysis and input from interested parties. After full development, the Quick Edge design featured a modified moldboard assembly that sandwiched the cutting edges in position with the aid of a new piece, the front plate. The front plate bolts directly to the face of the moldboard. The vertical cutting edge position is held by a series of pins that are inserted and retracted by three hydraulic cylinders. Some of the pins also apply pressure to the back of the cutting edges,

effectively reducing any chatter that might occur. This is important because chatter accelerates wear on the system and distracts the driver. Figure E.1 contains a high-level illustration of the proposed Quick Edge system.

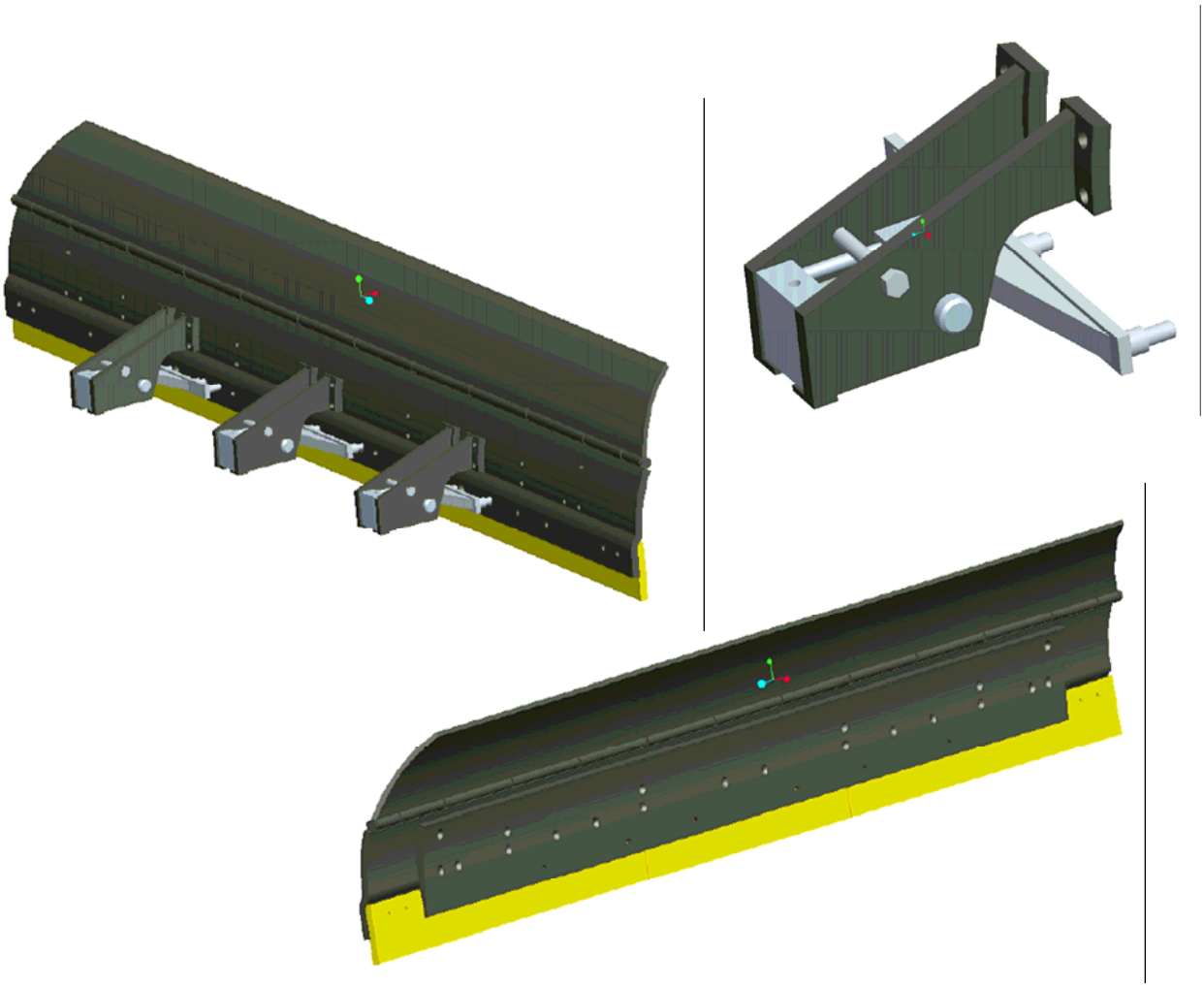

Figure E.1: Full Assembly Illustration

The hydraulic cylinders operate on the standard truck feed and are controlled simultaneously. A pair of bolts is used to fasten the cutting edges at each of the plow's ends to facilitate the use of curb guards. A Quick Edge cutting edge replacement requires these bolts to first be removed; the pins are then retracted and the old edges drop. The new cutting edges are positioned and fastened with temporary mounting pegs that slide in from the front. The end bolts are refastened and firing the cylinders forces the support pins back into position. The process requires minimal worker presence beneath the plow truck and reduces the time required by a factor of four.

The forces acting on an underbody snowplow were estimated based on the results of work performed by Wilfrid A. Nixon in association with the IDOT in the mid 1990's [1,2]. Extensive strength and fatigue analysis predicted that the Quick Edge assembly is robust enough to withstand all expected operating loads. To validate these findings and to demonstrate the

system's performance, a prototype was constructed. Basic operation was first verified on a test stand in spring 2005 and the prototype was mounted to an in-service truck in January 2006. Initial trials indicated adequate performance and so the design will be further evaluated by the Golden Valley staff throughout the remainder of the winter.

Prototyping costs greatly exceeded the budgeted estimates, mainly due to difficulties encountered machining the larger assembly pieces. The final price tag for the prototype was $10,140. Costs of production for the final design are expected to be significantly lower. The Quick Edge system was designed with modularity in mind and attempts were made to closely follow existing underbody conventions. This will facilitate production migrations, allowing plow manufacturers to utilize their existing equipment with only minor tooling modifications. A cost increase of $1779 over the standard underbody system is expected.

Two sources of cost reduction are expected to result from the Quick Edge underbody system. First, a monetary savings of $62.73 to $233.20 per cutting edge change is associated with the reduced labor and material requirements created through simplification of the process. Based on these numbers alone, the predicted cost increase of the Quick Edge system should easily be recouped across the life of the underbody. In addition, minimized injury risk during cutting edge replacement will result in fewer worker compensation claims and all around increased morale. Although the financial data was not available to quantify these potential savings, this is an area of improvement that cannot be measured in dollar figures alone.

Although field testing is still underway, the project is considered a success. The design has been met with great enthusiasm and the future of the Quick Edge underbody system is bright. As with any design, improvement is always possible and several suggestions have been made by some of the parties involved. These include integration of safety pins to prevent unwanted support pin retraction, use of a single 11-foot cutting edge, automatic pressure regulation for the hydraulic system, and overall reduction in assembly weight. Even without these modifications, the Quick Edge system fulfills all of its major objectives and may soon be used to increase Mn/DOT maintenance efficiency and safety.

Chapter 1
Introduction

The state of Minnesota has 135,000 miles of roadways, with more than 5,000 miles in the Twin Cities metro area alone [3]. These lanes are vital lifelines for Minnesota's residents and businesses and it is the responsibility of the Minnesota Department of Transportation (Mn/DOT) to ensure that the streets and highways remain clear during the infamous Minnesota winters. This is a difficult task with an average statewide snowfall of 58.6 inches [3].

Mn/DOT employs both chemical and mechanical treatments in their winter maintenance efforts, but one of the oldest and most well-known methods is plowing. Snow covered streets generally bring to mind the vision of a front-mounted snowplow throwing up clouds of powder, but today many highways are plowed with the aid of mid-mounted underbody scrapers which work well even at high speeds.

Mid-mounted underbody scrapers are attached to the underside of dump-style plow trucks between the front and rear axles. The specific design varies depending on the manufacturer, but the units generally consist of a moldboard-plow assembly that is mounted to the truck through a combination of linkages, hinges, springs, and hydraulic cylinders. Fastened to the moldboard is a set of cutting edges, which are the only parts of the plow in contact with the ground. Once the cutting edges are worn, they are replaced.

One of the main advantages of the underbody scraper is its ability to apply and maintain high downward pressure during plow runs. Forcing the cutting edges down onto the ice or compacted snow allows the scraper to more effectively remove material. However, it also greatly increases the wear on the contact surface and the cutting edges must be replaced frequently. This process is time consuming, tedious, and puts maintenance workers at risk for personal injury.

The focus of this project was to design an innovative system for attaching cutting edges to underbody scrapers. The new design will serve as an alternative to the current, labor-intensive bolting process. The main goals are to reduce the time and manpower required for cutting edge changes and to minimize the associated physical risk seen by maintenance workers.

A fairly standard design process was followed in this project. Chapters 2 and 3 outline the background investigation and subsequent problem definition. Chapter 4 is included as a short discussion of the concept generation and selection process. Chapter 5 features a full description of the design solution, which is then analyzed and evaluated in Chapter 6. The final chapter closes with a series of conclusions and recommendations. Other supporting material, such as BOM's and engineering drawings, can be found in the Appendices.

Chapter 2
Literature Review

Before a new design could be formulated, it was necessary to gain an understanding of all the aspects involved in current plowing methods and in particular, to investigate the mid-mounted underbody plow. A literature search provided a great number of publications and documents related to winter maintenance. Many served as general background material, including several short articles in Machine Design [4], Automotive Engineering International [5], Design News [6], and Public Works [7, 8, 9, 10]. The content of these articles was basic in nature and will not be described in any detail.

Two main bodies of research were integral in development of the new design. During the 1990's both the Iowa Department of Transportation [IDOT] and the Michigan Department of Transportation [MDOT] funded work aimed at investigating different aspects of plowing. Their efforts were conducted in isolation of one another and there was little reference made between the two bodies of work.

First, during the mid-1990's IDOT sponsored a series of three research studies aimed at characterizing the performance of cutting edges based on their geometry and mounting configuration. The studies were conducted by the Iowa Institute of Hydraulic Research within the University of Iowa. Wilfrid A. Nixon headed the research on each of the projects.

Nixon's 1993 publication, *Improved Cutting Edges for Ice Removal* [11], examined a number of parameters related to removing ice from pavement with cutting edges. The study investigated the effects of plow velocity, ambient temperature, blade geometry (rake angle, clearance angle, blade length, and flat width (see Figure .1), cast angle (see Figure 2.2), and chemical pre-treatment on the ice-scraping performance of several cutting edges. Experimental trials were conducted in a laboratory setting. Ice-scraping operation was simulated by forcing cutting edge segments across small concrete blocks with the aid of hydraulic rams. Clearance angle and blade length were found to be the most important parameters and a prototype cutting edge was designed based on the key research results. This experimental cutting edge was examined in Nixon's next study.

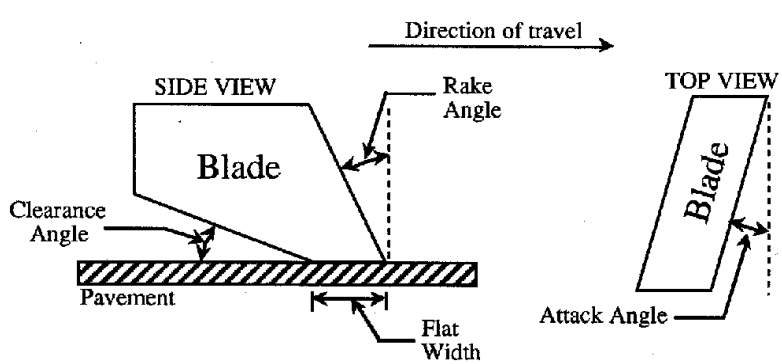

Figure 2.1: Nixon's Explanation of Cutting Edge Angles [10, p.2]

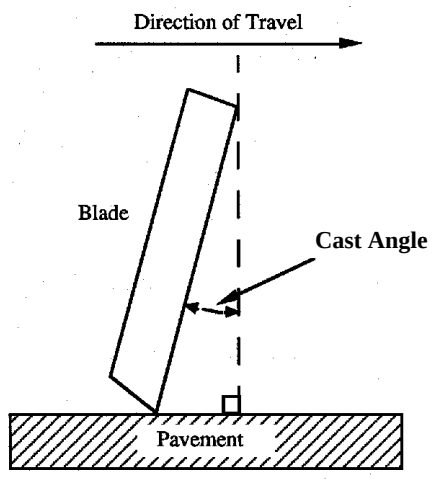

Figure 2.2: Nixon's Explanation of Blade Angle [9, p.6]

In the same year, Nixon published *Field Measurements of Plow Loads During Ice Removal Operations* [1]. This report explained his experimental methods and results in measuring the loads experienced by three different cutting edge configurations - a standard steel cutting edge, a standard carbide-inserted cutting edge, and the prototype cutting edge developed in his previous work. The cutting edges were mounted on an IDOT truck and used to scrape ¼inch – ½inch ice sheets from a closed course. The blade angle was varied between 0°, 15°, and 30°, with down pressure varying between low and high levels. Cutting edge performance was compared based on scraping efficiency (the ratio of vertical to horizontal forces) and scraping effectiveness (relating the amount of ice removed to the magnitude of horizontal force applied). Results indicated that all blades performed best with a 0° blade angle and the prototype cutting edge outperformed the standard configurations. Graphical and statistical data summaries were included for each of the 65 trial runs. The loading results varied even under near identical conditions, but this was attributed to the imprecise design nature of the equipment being tested. However, overall there was enough consistency to support the experimental test methods.

Several years later, Nixon conducted a follow up study in which several new cutting edges were tested on a closed course and load measurements were taken on two in-service trucks conducting general winter maintenance. The results were published in a 1997 report, *Measurement of Ice Scraping Forces on Snowplow Underbody Blades* [2]. The standard carbide-inserted cutting edge was tested as a control between the two studies and the performances of several different serrated cutting edge configurations were evaluated. Scraping effectiveness was defined as the average horizontal force and scraping efficiency was quantified in terms of the force angle:

$$\text{Force Angle} = \tan^{-1}[\text{ vertical force / horizontal force }] \qquad (1)$$

The serrated edges outperformed the standard configuration in ice scraping, but experienced accelerated wear. The validity of the experimental testing procedure was supported by correlation between the 1993 closed course, 1997 closed course, and 1997 in-service results. Statistical summaries for each trial run were included.

MDOT's separate funding and support produced two Master's Theses published at the Michigan Technological University and one report filed by the Great Lakes Center for Truck and Transit Research.

Alan Kempainen authored his mechanical engineering thesis, *Experimentally Measuring and Modeling Forces on a Truck Frame Due to Plowing Snow*, in 1997 [12]. His work suggested that plow force models based on Bernoulli fluid flow and impulse-momentum theory were not accurate for speeds between 5-15 mph. These models underestimate the true plowing forces because they overlook the effects of road-blade friction. Kempainen's experimental results showed that these forces can have significant importance. He also noted that the snow's resistive forces acted as step functions rather than the often assumed direct-linear functions of speed. The snow forces acting against the plow were relatively constant, but experienced a jump at 1 mph and then again at 5 mph. This phenomenon was explained by the existence of dynamic flow zones created in the snow being plowed.

In his mechanical engineering thesis, *Improving the Midmounted Moldboard Snowplow Truck: A User Based Approach* [13], Kevin Sweere addressed the lack of engineering in the snow removal industry. He commented on the use of "experiential based evolution" over engineering and at the time of his work in 1996, he was unable to locate a single moldboard manufacturer which was conducting basic research and development functions. The focus of his thesis was on improving the snowplow truck based on user feedback. He interviewed seven drivers and maintenance workers and combined the results with information from his literature review to create a list of suggestions for snowplow truck improvements. This provided good insight into the operation of plow trucks and worker concerns. Most pertinent to this project was a recommendation of new methods for changing underbody cutting edges. At the L'anse MDOT garage, a set of carbide-inserted cutting edges generally lasted about a week under normal winter operation, but could be worn down in a single 8 hour shift. Once the truck was raised, it took two maintenance workers 30 minutes to remove the pair of worn edges and bolt the new 90 pound cutting edges onto the moldboard. Sweere's conceptual solution was a jig that would catch the old edges as they dropped and then raise the new edges into position so they could be easily fastened. He estimated that this would allow a single maintenance worker to complete the job in the same amount of time. This equated to an annual statewide savings of approximately $50,000 for MDOT- even after jig development and deployment costs.

Walter Olson of the Michigan Technological University and Mark Osborne of the Keweenaw Research Center authored a report entitled *Dynamic Modeling of a Truck Equipped with an Underbody Midmounted Snowplow Blade* [14]. Their main objective was to create a computer-generated model for evaluating the performance of moldboard equipped trucks. They stressed the need to study the basic moldboard plow design and commented on the lack of a "... comprehensive body of knowledge regarding the underlying mechanisms and forces needed to design and optimize snowplows…" Their computer model offered some insight into the interaction between the truck and underbody plow, but the true value of their work was in the experimental results. Their work contained a number of experimentally determined estimates of the forces acting on the underbody plow in different operational situations. They used these numbers to validate their computer-generated estimates, but they could also serve as a base of comparison for Nixon's cutting edge loading results.

Several other resources were utilized during development of the Quick Edge design. Ruffridge-Johnson Equipment Company was kind enough to provide a drawing of the Root Spring Scraper Company's I-66-11 moldboard. Methods from textbooks by Robert Juvinall and Kurt Marshek [15] and Joseph Shigley [16] were employed in the analysis of the design. Finally, a section from The Lubrication Engineers Manual was used to gain a basic understanding of hydraulic system operation [17].

Chapter 3
Problem Definition

3.1 Project Conception

The need for this project was identified at an August 2002 brainstorming session for Mn/DOT maintenance personnel. A problem with the current cutting edge changing process was recognized and the topic was added to a list of potential research issues. In fall 2003, Craig Shankwitz of the University of Minnesota's Intelligent Transportation Systems Institute, suggested the topic for my honors thesis project. Ken Nelson of Mn/DOT provided a detailed problem description and guidance in getting the project rolling, but was promoted to another position soon after the project's outset. John Tarnowski then stepped in as the project's technical liaison for Mn/DOT.

3.2 Problem Statement

The purpose of this project is to create an innovative system for attaching carbide-inserted cutting edges to underbody snowplows. The main objectives of the new design are to reduce the time and labor necessary in replacement of underbody cutting edges and to reduce the risk of personal injury involved in the current bolting process. This will result in both direct and indirect cost savings.

3.3 Equipment Description

The underbody midmounted plow is attached to the plow truck's undercarriage, between the front and rear axles. The total plow length is usually between 10 and 12 feet. A static frame holds the plow in position and a series of linkages and hydraulic actuators provide several degrees of freedom in the plow assembly. The driver can alter the plow's vertical height, blade angle, and cast angle. The cast angle is displayed in Figure 3.1. The blade angle is generally near vertical or sometimes tilted slightly backwards so that if an obstacle is encountered the springs and hydraulic accumulators allow give and prevent damage to the plow or vehicle.. The cast angle controls the direction snow is thrown during plowing and is usually set between 35° and 45° on either side. The underbody plow used varies from shop to shop, but this project focused on modifying the Root Spring Scraper Company's I-66 folding moldboard scraper. This is the underbody plow used at the Golden Valley maintenance shop.

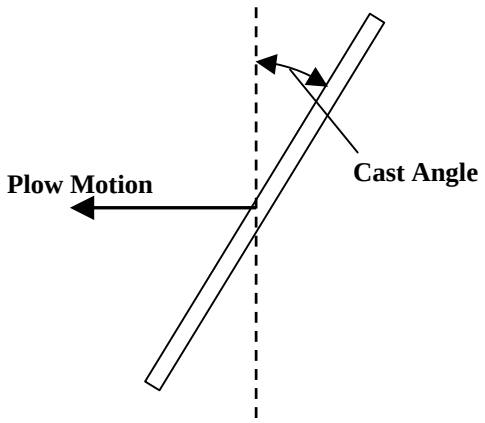

Figure 3.1: Illustration of Cast Angle

The plow assembly pictured in Figure 3.2 consists of a moldboard, a top piece, and cutting edges. The moldboard and top piece are hinged so that the plow face is more compact when in the stored position. The cutting edges are the only elements in contact with the ground and are replaced before their wear allows the moldboard to reach the pavement. Also pictured is the location of the cylinder and spring supports. Four such assemblies are mounted to the back of the moldboard and are responsible for applying downward pressure to the plow. Also, if an obstacle is encountered during plowing, the springs give and allow oil to be displaced from the cylinders into a hydraulic accumulator.

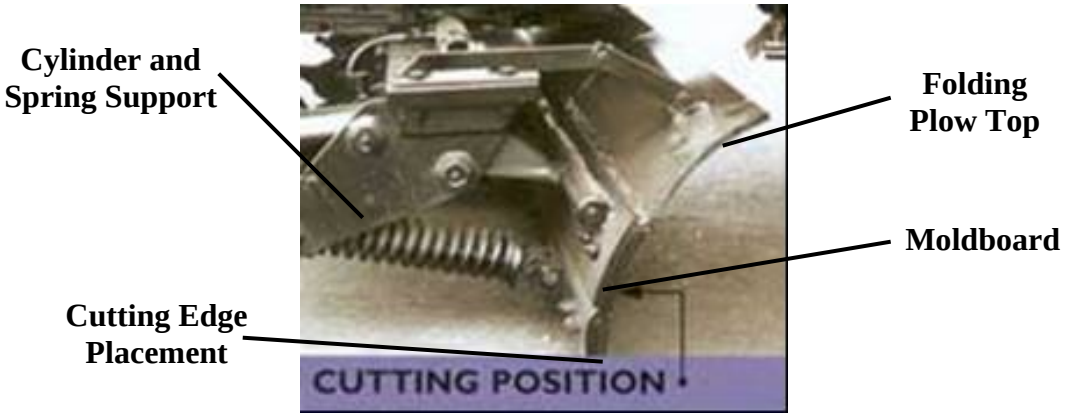

Figure 3.2: Underbody Scraper Assembly
(Courtesy of *Root Snow Plows* Website [18])

Cutting edges come in a variety of shapes and sizes. A widely used geometry can be seen in Figure 3.3. Hardened, tungsten-carbide inserts are included in the tips to increase the effective life. The Golden Valley shop obtains their cutting edges from Kennemetal. A series of three cutting edges are mounted to the 11 foot wide Spring I-66 scraper. One 3 foot section is centered between two 4 foot sections.

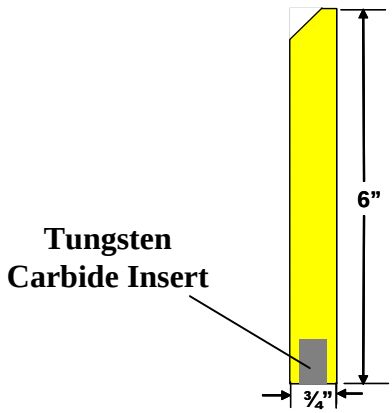

Figure 3.3: Standard Cutting Edge Geometry (Side View)

The true advantage of the mid-mounted underbody scraper is the ability to apply a variable download pressure. Configuration depends on manufacturer design, but generally hydraulic cylinders apply a downward force that prevents the cutting edges from riding up over the ice or snow. The force applied to the cutting edges can approach the weight of the truck, but removing weight from the truck’s axles decreases the driver’s control. Three standard operating positions are illustrated in Figure 3.4. Underbody scrapers are usually operated in the “float” position, where just enough pressure is applied to hold the cutting edges flush against the pavement. Pressure is increased when a particularly tough patch of ice or snow is encountered, but is used conservatively to avoid excessive wear on the plow and roadways. In addition to winter maintenance, underbody scrapers can be used to spread gravel and clear debris during the warmer months.

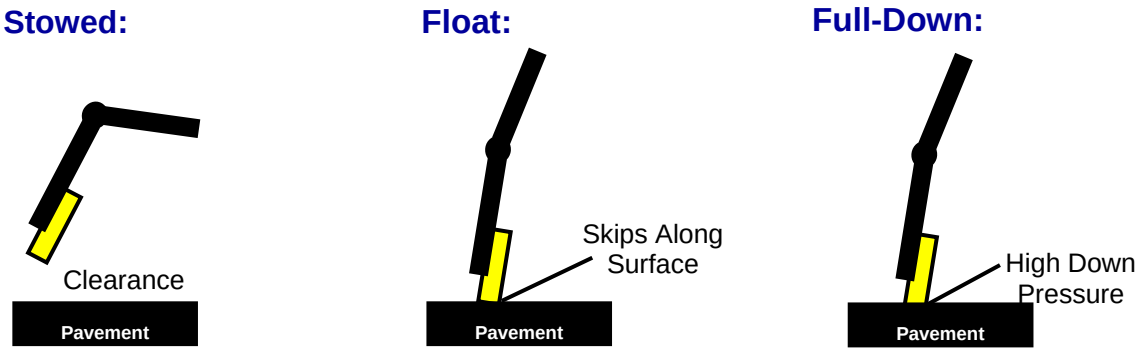

Figure 3.4: Underbody Operating Positions

3.4 Further Problem Investigation

Ken Nelson provided a well-defined project scope and the background investigation created a solid base on which to build, but nothing can beat first hand experience. The Golden Valley shop was very accommodating and provided the opportunity for observation of some daily maintenance tasks. To help with information gathering, a question inventory was prepared ahead of time and completed as the maintenance personnel went through a cutting edge change. For a complete account of the site visit and survey results, please refer to Appendix A. A short summary of the cutting edge change is included below.

> It took two maintenance workers 45 minutes to perform a cutting edge change. To begin, the truck was raised to shoulder height with the aid of four hydraulic lifts. The three cutting edges were fastened to the moldboard with 14 carriage bolts, which were removed individually with a pneumatic torque wrench. The center cutting edge had been broken in half and several of the bolts were damaged and had to be burned off with an acetylene torch. This created a shower of red-hot sparks that rained down next to the workers. Damage outside of general wear is rare, but bolts are often burned off when they were stuck in position or the threads have been stripped. Several of the bolts were located close to the hydraulic/spring support and this created problems in correctly positioning the torque wrench. Removal of the undamaged, unobstructed bolts was straightforward. Once the old cutting edges were removed, the new ones were positioned by one worker, while the other fastened the bolts.

The level of effort involved and threats to worker safety were quite apparent after observing the cutting edge change. The two maintenance workers estimated that if no problems were encountered, a cutting edge change could be completed in 10-15 minutes. This was, however, not the norm. The acetylene torch was generally required and positioning the heavy cutting edges (40 or 60 lbs a piece) and torque wrench proved difficult. The process was also greatly facilitated by the use of the hydraulic lifts. Unfortunately, only about 20 of the 130 maintenance shops in Minnesota have similar equipment. The change time and associated danger are greatly magnified when the workers are required to crawl beneath the plow trucks. The threat of back, head, and hand injuries, as well as burns from the torch, all increase. The emphasis of the new design was therefore to minimize (or reduce) the time spent beneath the truck and to simplify the process as a whole. Time savings are dually-manifest in reduced costs and increased worker safety.

Chapter 4
Concept Generation and Selection

Once a solid background had been developed and the problem was thoroughly defined, the next step was to begin generating potential design concepts. Several weeks were spent sketching out ideas and the results were discussed with the project advisors. This section discusses a few of the more promising designs and the results of their qualitative analysis.

One early idea was to simply reduce the number of bolts used. The incredibly low failure rate with which the bolts perform could be indicative of over-design and fewer bolts may be able to get the job done just as well. However, this solution only offered a minimal advantage and did not eliminate worker risk. A more innovative design was needed.

A second idea involved replacing the cutting edge bolt holes with a series of L-shaped slots cut into the top of the cutting edge. This concept is illustrated in Figure 4.1. The cutting edge could be mounted to the moldboard by sliding fixed pins through the slots. A single bolt would be used to secure the cutting edge in position and prevent horizontal sliding. Although this design greatly simplified the mounting process, the cutting edges would experience significant chatter due to the large clearance required in the slots. This would increase wear on the pins and the noise would be very distracting to drivers.

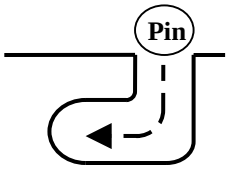

Figure 4.1: L-Shaped Pin Slots

Some form of pressure was required to securely fasten the cutting edges. An attractive solution was to sandwich the pieces between two clamping surfaces and allow the high frictional forces to hold their position. However, it was decided that some sort of support pin was still necessary. The pins prevent the cutting edges from dropping if the clamping force is lost and are an easy way to ensure everything is properly aligned during mounting. Several design variations were developed combining these two concepts. Spring, mechanical lever, and fluid power forces were all investigated as potential clamping systems and the force delivery mechanism varied from hinged plates to variable diameter pins. All the designs offered certain benefits, but one concept was chosen because it best fit the goals this project was trying to achieve.

In the final design concept, the cutting edges are held between the moldboard and a separate plate mounted to the plow's face. The bolts are replaced by a series of pins that are controlled by several hydraulic cylinders. Hydraulic power was chosen because it offered the most potential for automating cutting edge changes and because it is already available and widely utilized on all Mn/DOT snowplows. The support pins have variable diameters and the wider, outer surfaces will be used to apply pressure to the back of the cutting edges. An in depth discussion of the fully developed design is included in the next chapter.

Chapter 5
Design Description

The following chapter describes the modifications included in the Quick Edge cutting edge attachment system. Illustrative diagrams, such as those in Figure 5.1, are included in the descriptions, but a full set of detailed design drawings can be found in Appendix B.

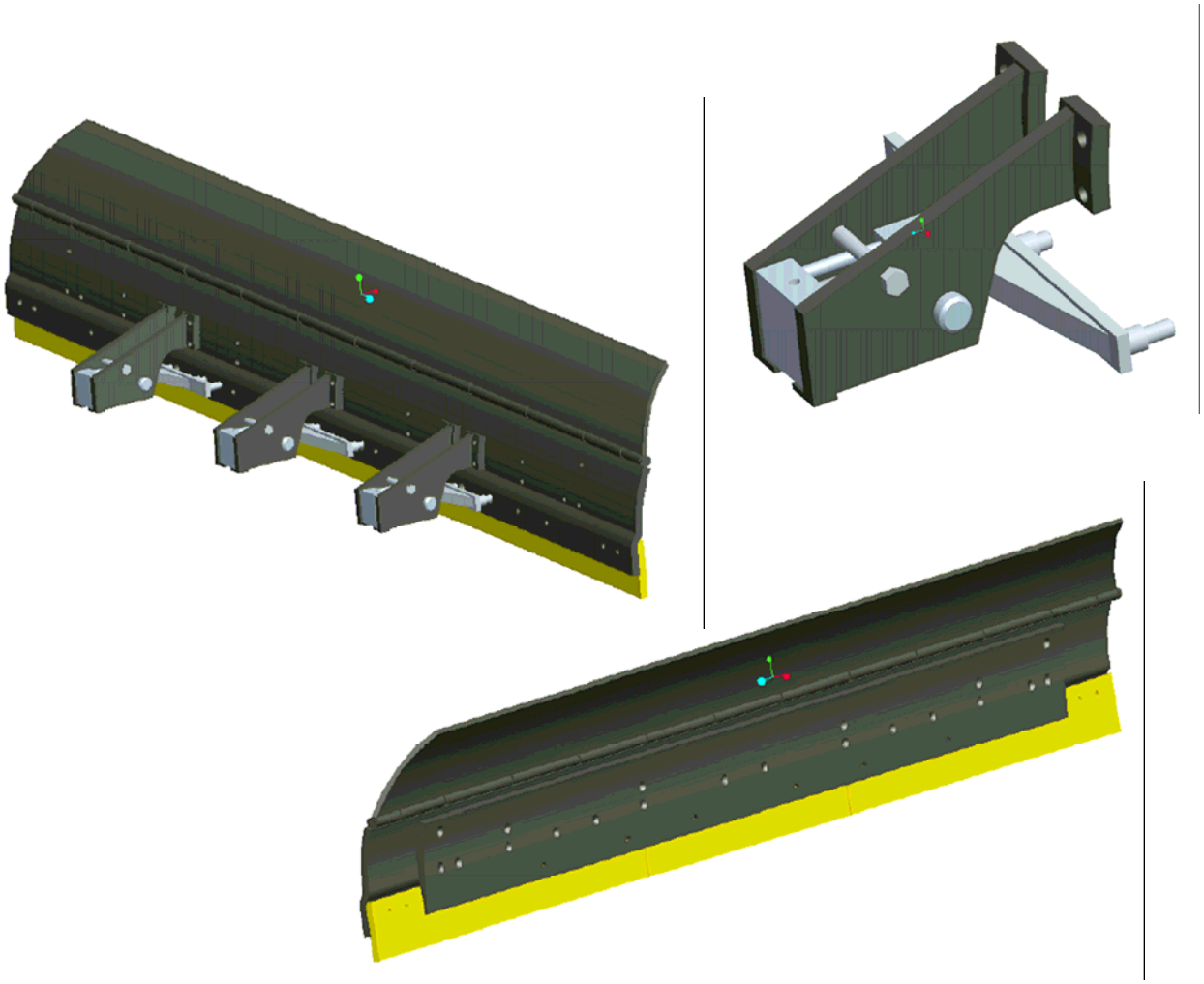

Figure 5.1: Full Assembly Illustration

5.1 Modified Moldboard and Face Plate Assembly

Figure 5.2 features a comparison between the original moldboard and the Quick Edge moldboard assembly. The Quick Edge design features a new piece, the faceplate, which helps hold the cutting edges in place. The moldboard and faceplate are bolted together, sandwiching the cutting edges between their free ends. This configuration provides a reactive clamping force and moment that prevents lateral movement of the cutting edges. However, the fit is loose enough to allow the cutting edges to slide into position.

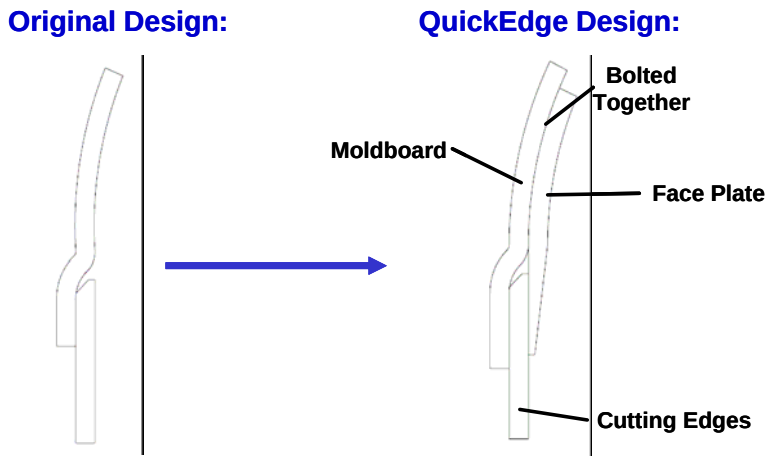

Figure 5.2: Comparison of Original and Quick Edge Moldboards

The moldboard and faceplate are produced from AISI 1045 steel. This is the same material used in the original design and was chosen for its high strength properties.

The specified geometry of the Quick Edge moldboard and faceplate was intended to mimic that of the original moldboard, allowing for minimum effort in a production transition. However, the moldboard end length has been extended based on the results of a detailed stress analysis.

To allow for proper flow over the plow's face and prevent the build up of material below its bottom edge, the front plate features a taper. In addition, the front plate's transverse length is shorter than that of the moldboard. This provides the opportunity to attach curb-guards to the moldboard's ends. This concept is illustrated in Figure 5.3.

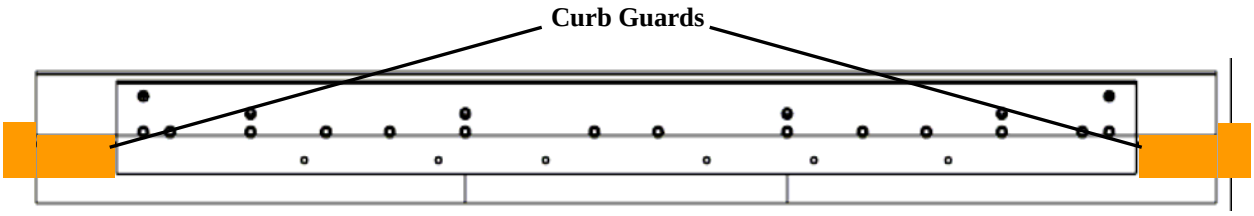

Figure 5.3: Front View of Plow Assembly with Optional Curb Guards

5.2 Pin Plates

A majority of the bolts previously used to fasten the cutting edges have been replaced by sets of pins that slide into the back of the moldboard assembly. The complete configuration is pictured in Figure 5.4. Two bolts are still used to attach the cutting edges at each end of the moldboard, but three pin plates support and secure the edges along the rest of the moldboard's length.

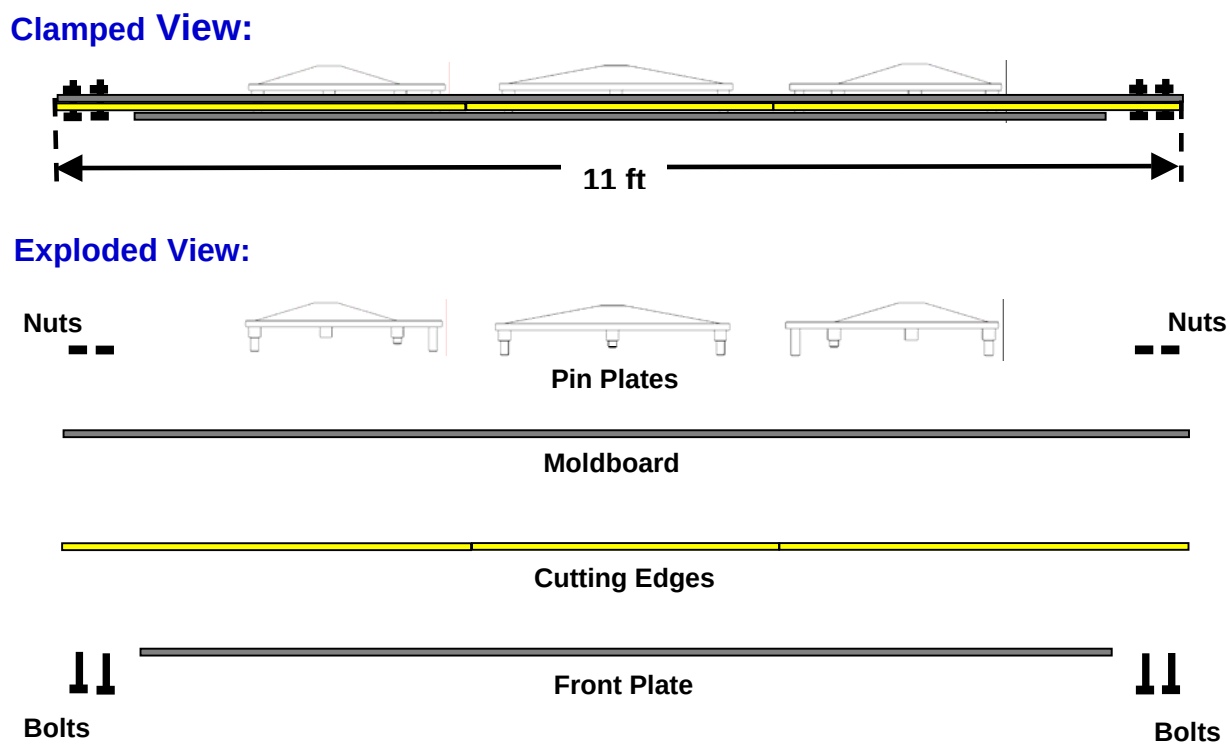

Figure 5.4: Exploded Moldboard Assembly with Pin Plates

The pins are produced from AISI 414 stainless steel. These pins are subjected to very high forces and so a high strength material is required. It is also important that the pins are resistant to corrosion and surface damage because they must be able to easily slide in and out of the pin holes without getting bound by rust. In addition, AISI 414 stainless steel lends itself to machining and the parts can easily be produced with the proper tooling. Material selection for the pin plates and supports is of less importance and basic AISI 1020 steel will suffice (but a substitute material could be utilized based on availability).

The Quick Edge design features three types of pins: support, pressure, and dual-purpose. A visual comparison is included in Figure 5.5. The support pin passes through the moldboard, cutting edge, and face plate, holding the cutting edge in vertical position. The pressure pin has a broad face that passes through the moldboard and applies a load to the back of the cutting edge across a contact surface. This pressure holds the cutting edges flush against the face plate and eliminates chatter in the assembly. The dual-purpose pins have variable diameters so they can provide both support and pressure to the cutting edges. They are essentially a combination of the support and pressure pins.

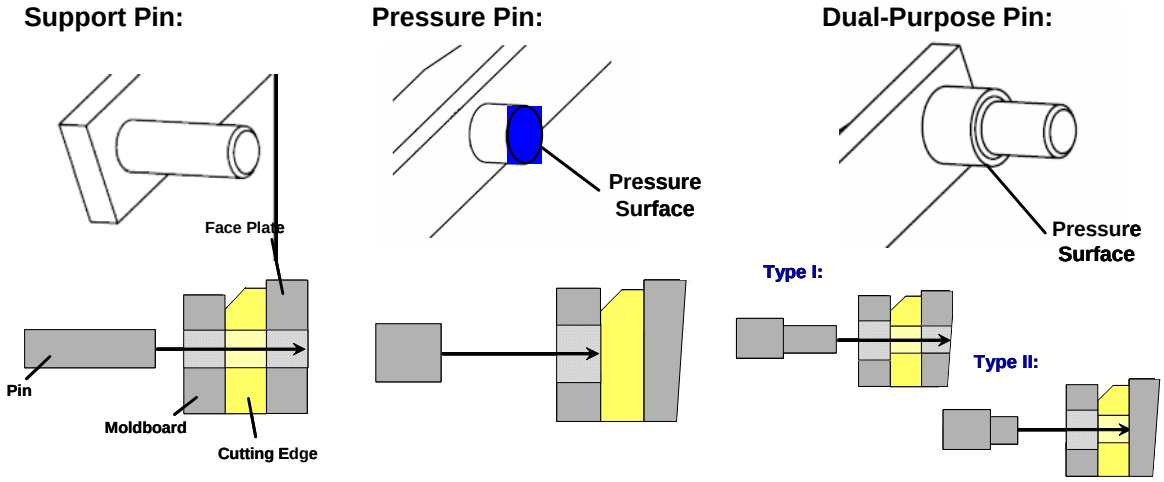

Figure 5.5: Pin Type Comparison

The pins are deliberately placed to ensure that the cutting edges are fully supported and that the pressure load is most-evenly distributed along their lengths. This results in a different pin configuration for each of the supporting plates. The three configurations are shown in Figure 5.6. The supporting pin plates were designed to ensure that high loads could be transferred without deforming and to provide a proper interface with the hydraulic cylinders (which will be described later in the chapter).

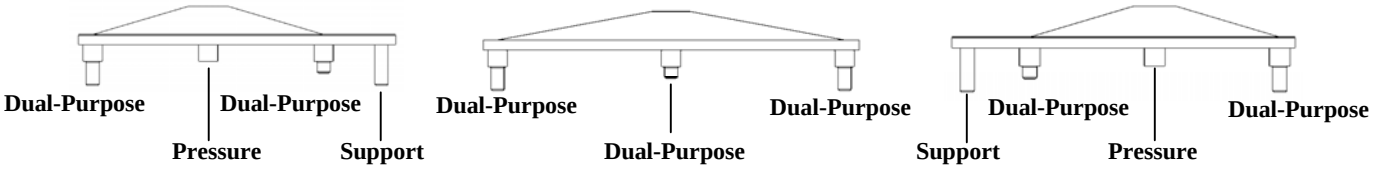

Figure 5.6: Pin Type Configuration

A final feature of the pin design was the inclusion of chamfers around the pin holes and on the pin ends, as pictured in Figure 5.7. This helps guide the pins into the holes without the interference of the surfaces catching.

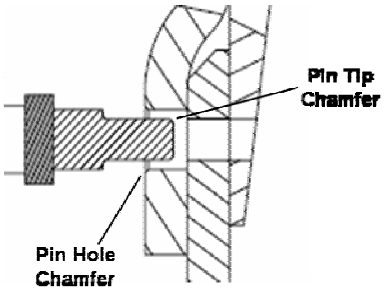

Figure 5.7: Pin Chamfers

5.3 Hydraulic System

Each pin plate is mounted to a hydraulic cylinder that fires and retracts the pins. The system will be operating in the extended position a majority of the time. In this extended position, the cylinders hold the pins steady as they support and apply pressure to the cutting edges. The cylinders must apply a constant force to ensure that the cutting edges do not chatter during operation. Chatter decreases the effective life of the plow system and distracts the driver. The hydraulic cylinders will only be retracted during cutting edge changes and should remain pressurized whenever the truck is operational.

The three cylinders are controlled concurrently to maintain simplicity in cutting edge changes. The cylinders feed off the truck's existing hydraulic system. A single driver-operated 4-way, closed center control valve regulates pressure in all the cylinders. Flow is split with a 3-to-1 manifold and then retracted with a 1-to-3 manifold on the return trip. Pressure leakage will be unavoidable on longer runs and the driver may need to recharge the cylinders if pressure drops below a specified level. A hydraulic schematic is included in Figure 5.8. When the truck is not in use, the pin plates will be held in place by their own weight and friction between the pins and hole surfaces.

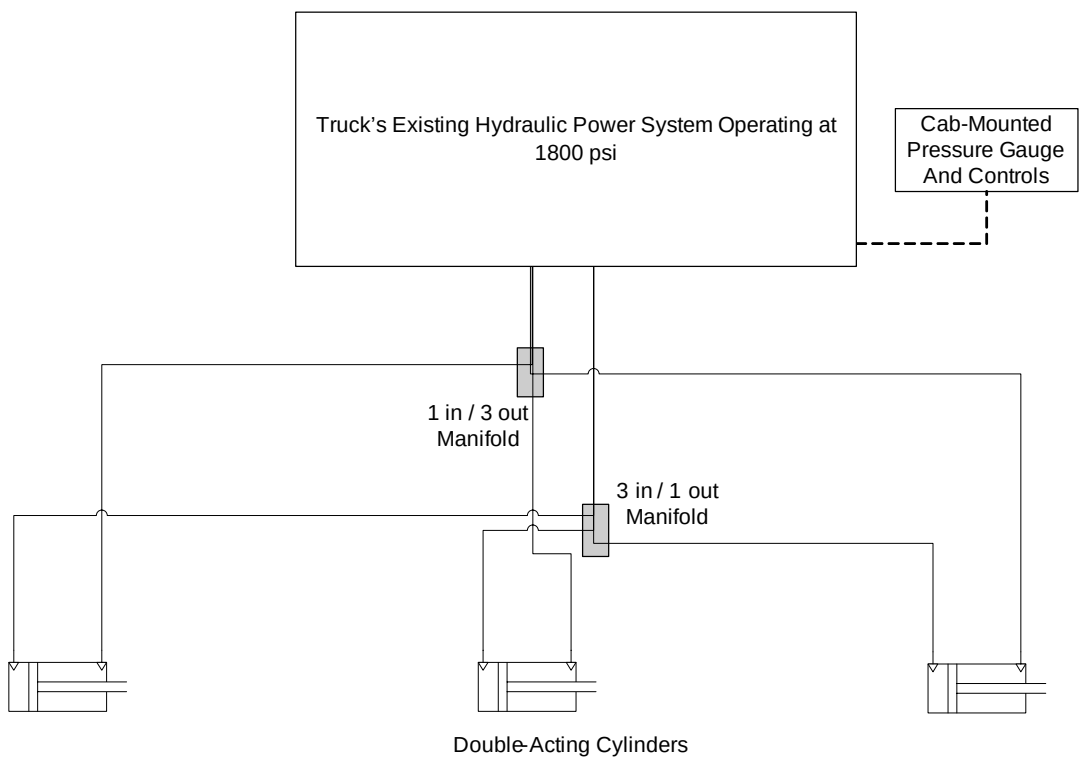

Figure 5.8: Quick Edge Hydraulic Schematic

5.4 Hydraulic Supports

The hydraulic cylinders are supported by mounts that attach directly to the back of the moldboard. This ensures that a constant pressure is applied to the cutting edges, no matter what position the plow assembly is in. The support design was based closely off that of the existing spring/cylinder supports. However, the specific geometry is purely functional and depends heavily on the cylinder used. An exploded view of the support is included in Figure 5.9.

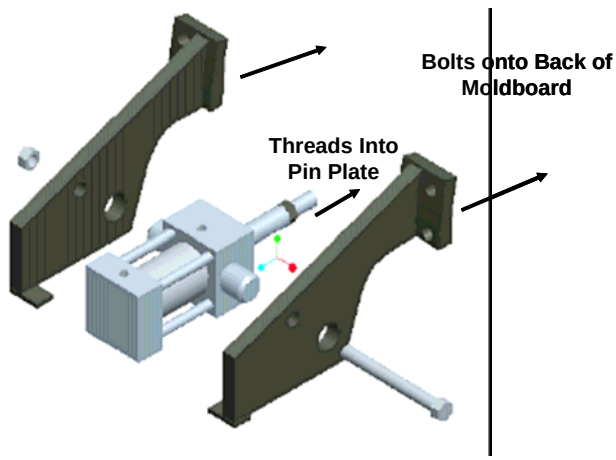

Figure 5.9: Exploded View of Hydraulic Support

5.5 Cutting Edge Modifications

Although custom cutting edge configurations were investigated in the early design phases, Mn/DOT requested that the Quick Edge system accommodate the commonly used 4'-3'-4' cutting edge layout and so major modification of the cutting edge geometry was avoided. However, one minor change was required. There are two new hole-placements on the 3 foot cutting edge. The modification is illustrated in Figure 5.10.

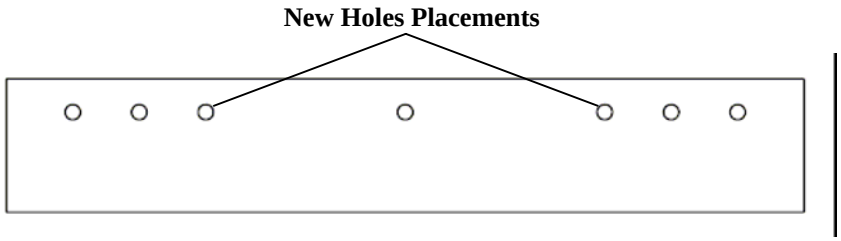

Figure 5.10: Extra Cutting Edge Hole Placements

5.6 Description of Cutting Edge Change

Changing cutting edges becomes a very simple process with the Quick Edge cutting edge attachment system and is best utilized where hydraulic truck lifts are not available. To facilitate the change, the underbody plow can be rotated so that it is perpendicular to the truck (a zero degree cast angle). This ensures that the plow's ends are fully extended from beneath the truck. Next, the two outer pairs of bolts are removed from plow ends. Retracting the hydraulic cylinders allows the cutting edges to drop from the moldboard. Simultaneous release of all three cutting edges could pose a threat to maintenance workers if they were not clear of the falling pieces. It would therefore be beneficial to position a jig or stand directly beneath the underbody to catch the cutting edges as they drop. Positioning jigs are already utilized at some Minnesota shops, but a simple wooden rack or palette would suffice.

Once the worn cutting edges have been removed, the replacements are slid into position. The cutting edges are mounted individually and when each is correctly placed, mounting pegs and end bolts are inserted from the front. The 4 foot cutting edges are held by one bolt and two mounting pegs and the 3 foot section is held by two mounting pegs. After all three cutting edges have been fixed, the hydraulic cylinders are fired and the mounting pegs are forced from the holes. The mounting pegs can be connected by small sections of rope or chain to facilitate cleanup. Finally, the pairs of end bolts are fastened and the process is complete.

With the Quick Edge system, workers are still required to work briefly beneath truck while they position the cutting edges, but the time required has been greatly reduced. It is now only necessary to slide the cutting edges into position and insert six pegs. It is estimated that this will result in only a quarter of the time spent under the truck. The time savings is even greater when compared to cutting edge replacements where an acetylene torch must be utilized.

Chapter 6
Design Evaluation

6.1 Supporting Analysis

6.1.1 Determining Forces Acting on Cutting Edges

Strength analysis of the Quick Edge moldboard assembly required information regarding the forces acting on an underbody plow. Unfortunately, the project's resources did not provide opportunity to measure these values (that would have been a large project in and of itself) and so it was necessary to develop an adequate force model. This was accomplished by utilizing experimentally determined data found in two reports published by Wilfrid A. Nixon in association with the Iowa Department of Transportation [1,2]. Nixon performed a great number of experimental trials in which the forces and setup parameters were continuously measured as an underbody plow scraped roadways in winter conditions. The vertical and horizontal pavement forces and the blade and force angles were the main quantities of interest. Each trial summary included the minimum, maximum, standard deviation, and mean value for each of these quantities.

Included in Figure 6.1 is a summary of the forces acting on an operational cutting edge. The force imparted by the pavement has been broken into its horizontal and vertical components- F_H and F_V. The pavement force components with respect to the x-y orientation (X_{PAV} and Y_{PAV}) have not been pictured, but will be utilized in later analysis. The reactionary forces (X_R, Y_R, and M_R) are supplied by the bolted fasteners and act to hold the cutting edge in static equilibrium. By treating the cutting edges as a simple 2D free-body, the reactionary forces can be found in terms of the pavement force components and the blade angle (α), as described below.

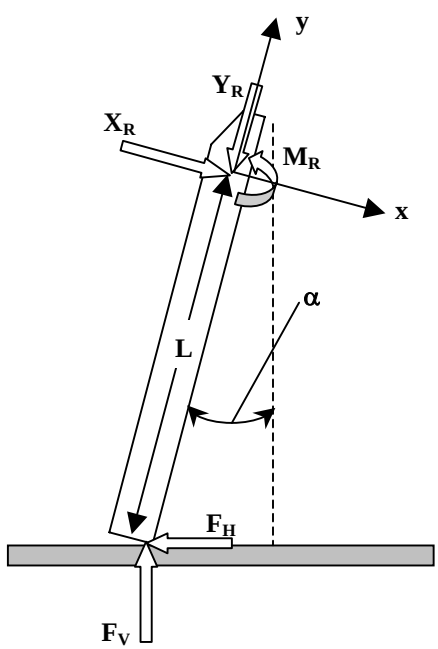

Figure 6.1: Cutting Edge Force Free-Body

Horizontal Reaction Forces:

$X_R = F_V \sin\alpha + F_H \sin(\alpha - 90)$

$\rightarrow X_R = a_x F_V + b_x F_H$ (2)

$a_x = \sin\alpha$ (3)

$b_x = \sin(\alpha - 90)$ (4)

a_x, b_x = horizontal constants

$X_{PAV} = X_R$

Vertical Reaction Forces:

$Y_R = F_V \cos\alpha + F_H \cos(\alpha - 90)$

$\rightarrow Y_R = a_y F_V + b_y F_H$ (5)

$a_y = \cos\alpha$ (6)

$b_y = \cos(\alpha - 90)$ (7)

a_y, b_y = vertical constants

$Y_{PAV} = Y_R$

Moment Reaction::

$M_R = (X_{PAV})(L)$ (8)

Figure 6.2 is a plot of the pavement force components acting on an operational underbody plow, as measured in one of Nixon's trials. It is clear from this figure that these forces do not remain constant during plow operation. The forces tend to fluctuate about a mean value as the plow skips along the pavement. These variable forces create a fatigue state of stress on the underbody plow system. Analysis of such a stress stat requires estimates of both the mean and alternating force values.

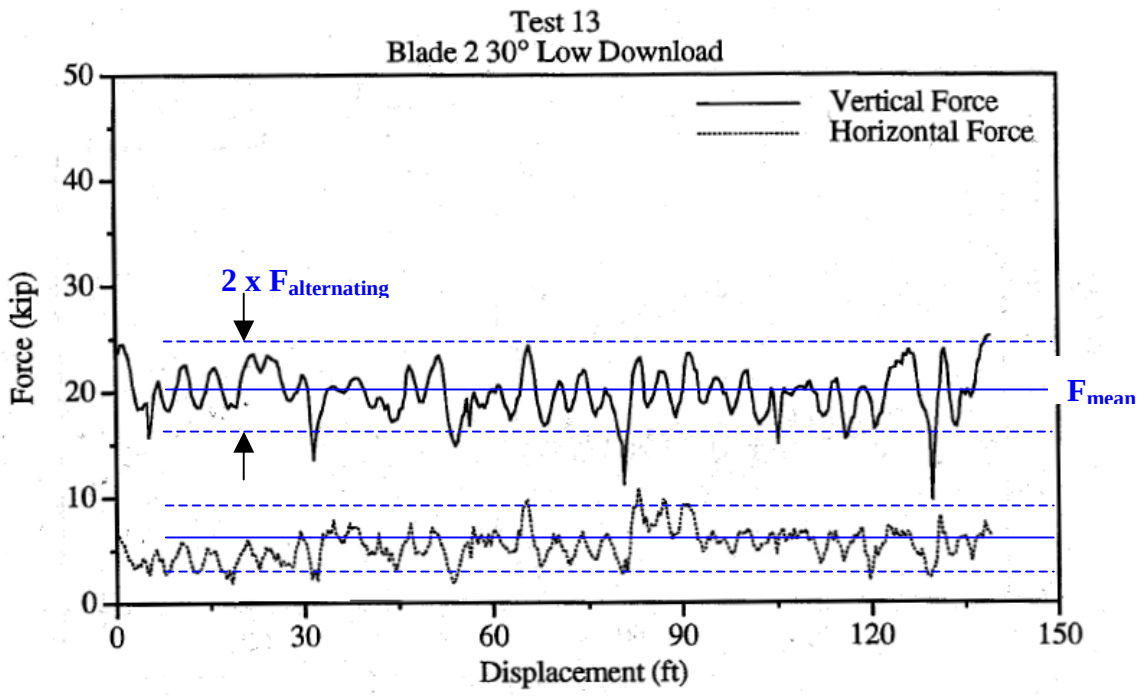

Figure 6.2: Graphical Trial Summary of a Trial Run [10, p. 74]

The mean forces were found by using equations (2-7) to calculate the reactionary forces for each trial run and then taking the overall average for each loading condition (either float or full-down pressure). Estimating the alternating force values was a bit more complicated. The standard deviation was given for each trial's force measurements. Through a series of statistical manipulations, these values were used to find an estimate of the standard deviations for the corresponding reactionary forces in each trial run. The alternating values of the reactionary forces were then approximated as two times the average of all the reactionary standard deviations for each loading condition (again, float or full-down). This process can best be understood by walking through the analytical summary included below. The formulas have been generalized and are equally applicable to both the X and Y reactionary forces (X_R and Y_R).

General Alternating Reactionary Force Analysis:

$F_R = a\ F_V + b\ F_H$, F_R = Representative Reactionary Force (9)

E(VARIABLE) = Mean Value of VARIABLE

$E(\ F_R\ ) = a\ E(\ F_V\ ) + b\ E(\ F_H\ )$ (10)

Var(VARIABLE) = $\sigma_{VARIABLE}^2$ = Variance of VARIABLE

$$Var(\ F_R\ ) = a^2\ Var(\ F_V\ ) + b^2\ Var(\ F_H\ ) + 2\ Cov(\ F_V\ ,\ F_H\ )$$
$$= a^2\ Var(\ F_V\ ) + b^2\ Var(\ F_H\ ) + 2\ |\ ab\ |\ Corr(\ F_V\ ,\ F_H\ )\ \sigma_V \sigma_H \quad (11)$$

Mean Force = $E(\ E(F_R)_1 + E(F_R)_2 + \ldots + E(F_R)_n\ )$ (12)

Alternating Force = $2 \times E(\ \sigma_{R,1} + \sigma_{R,2} + \ldots + \sigma_{R,n}\ )$ (13)

Nixon's work featured numerous sets of trials that varied several different plow parameters. This analysis was concerned only with the variation between situations of high and low down pressures. To obtain the most appropriate model, only trials sets with parameters similar to Mn/DOT's underbody plow operation were chosen. For float plow conditions, data were analyzed from a series of in-service, low download plow runs. For full-down pressure conditions, the data was taken from a set of closed-course trials in which an underbody scraped a thick sheet of ice while applying high levels of pressure. The respective sets of data were analyzed according to the methods described above and the resulting estimates for horizontal and vertical mean and alternating reactive forces are included in Table 6.. The sorting and analysis of this data was accomplished with the aid of MS Excel.

Table 6.1: Mean and Alternating Force Estimates

Forces (lbs)		Mean Force	Alternating Value
Float:	Vertical Reaction (Y_R)	10,600	4,200
	Horizontal Reaction (X_R)	10,400	3,800
Full Down-load:	Vertical Reaction (Y_R)	22,200	5,400
	Horizontal Reaction (X_R)	18,200	5,200

6.1.2 Stress and Fatigue Analysis

One of the main advantages of the underbody snowplow is the ability to apply high forces while clearing roadways. This increases the plow's effectiveness, but also creates high stresses within its components. Current underbody plow designs operate with very low levels of failure and the Quick Edge underbody system needed to match this performance. The altered moldboard design and addition of the front plate provided the greatest potential points for failure and so an in depth stress analysis was used to optimize their strength. A separate stress calculation was carried out to ensure that the pins would support the vertical cutting edge loads. Many other "back-of-the-envelope" calculations were used to validate additional design decisions, but only the analysis of the three previously mentioned components warrants discussion.

The strength investigation was an iterative process. Each phase began with the development of force relations based on variable assignments (rather than hard dimensional quantities). These variable relations were entered into a computer program, Engineering Equation Solver (EES), where they could be simultaneously evaluated for different value combinations. The use of EES allowed for the effects of different design changes to be quickly investigated. As the design progressed, the analytical model was updated and refined. The following section outlines the basic relations used to develop the final model and explains the results. A complete listing of the EES code utilized can be found in Appendices C through E.

6.1.2.1 General Overview of Stress Analysis:

The fundamental starting point for the strength investigation was determining the load values acting on the different components. The underbody force model and a series of free-body force balances provided the necessary variable relations. From this, it was then possible to determine equations for the highest stresses seen within each component. However, the existence of fluctuating loads required that the analysis be expanded into the fatigue state.

The moldboard, front plate, and pins were analyzed in several states of fatigue loading. These states were defined by the changes in download pressure an underbody snowplow will generally be subject to during operation. The download varies between zero, float-loading, and full-download. In addition, when a certain download is applied the underbody will see force fluctuation as the cutting edge skips along the pavement. Two operational fatigue states were defined as the load fluctuation during float and full-download plowing (States 1 and 3); and two fatigue states were defined as the cycle between no loading and float or full-download (States 2 and 4). A graphical summary of these four fatigue states can be found in Figure 6.3. The cycle between float and full-download was considered, but would not result in worst-case stresses and was not included. States 1 and 2 are the main cases of interest, as the underbody plow will be operating in float loading a great majority of the time. However, it is still necessary to validate the components' ability to operate under full-download conditions.

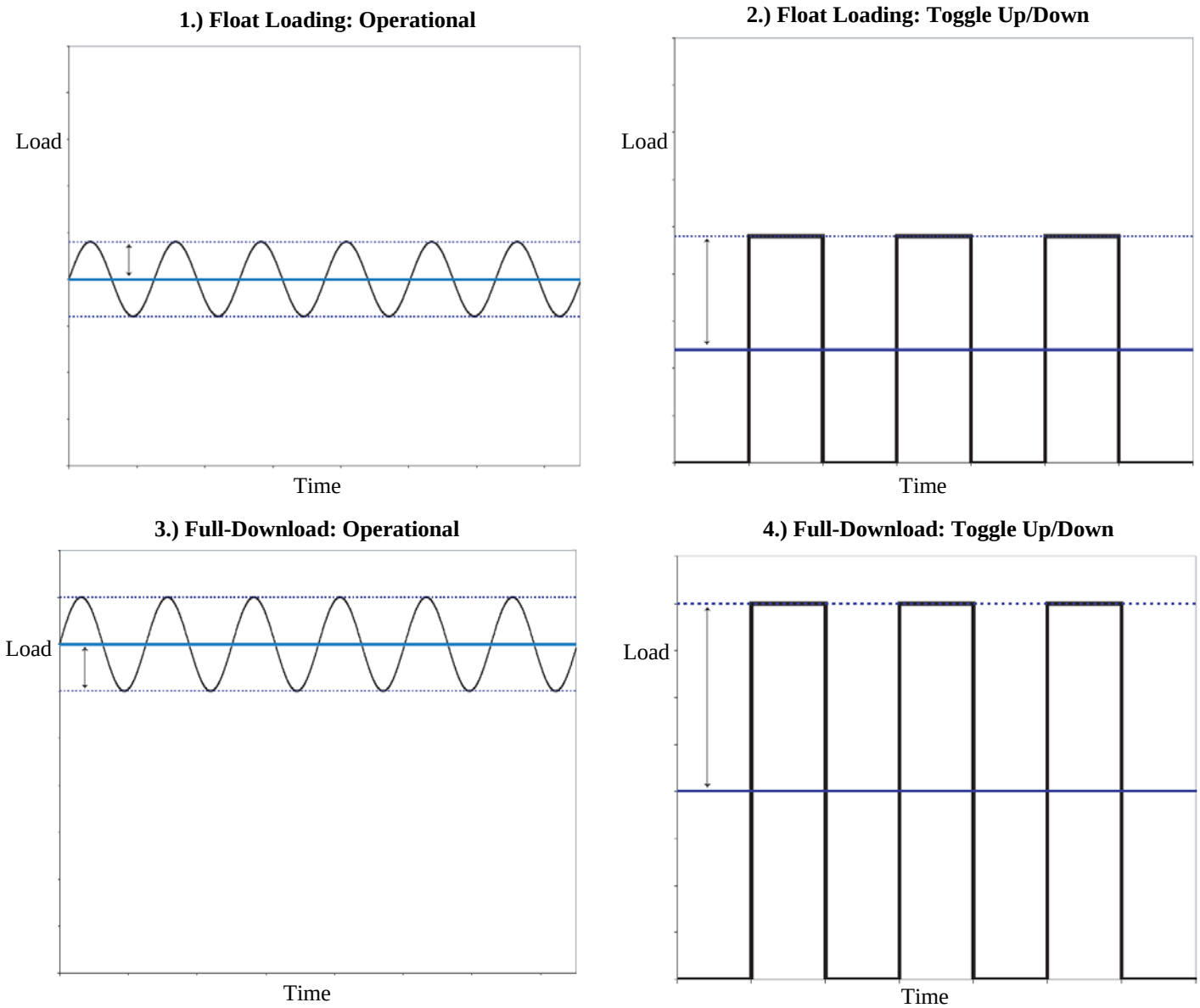

Figure 6.3: Graphical Representations of Four States of Fatigue

6.1.2.2 Cutting Edge Force Relations:

The previous major section outlined the development of an underbody force model and included a simple free-body analysis of the forces acting on the cutting edges (See Figure 5.5). In the original design, the reactionary forces (X_R, Y_R, and M_R) are provided by the 14 bolts used to fasten the cutting edges. In the Quick Edge design, only 4 bolts remain and so the acting forces are distributed amongst several components.

Figure 6.4 contains the revised cutting edge force distribution. The x and y component analysis has been separated for clarity. In the x-direction, the moldboard and faceplate provide distributed loads across the cutting edge faces (ρ_b and ρ_f, respectively). The moldboard and face plate will tightly sandwich the cutting edges with little clearance and so it was assumed that their load distribution remains fairly constant over the areas of contact. Also included is the concentrated force of the pressure pins pushing on the back of the cutting edges (F_P). The overall interaction of these forces counters the horizontal pavement force (X_{PAV}) and a majority of the moment it creates. The four end bolts provide the remainder of the reactionary moment (M_{Bolts}). Force relations in the y-direction are quite a bit simpler. The vertical pavement force (Y_{PAV}) is completely countered by the series of pins and bolts which support the cutting edges, shown as distributed load ω_P.

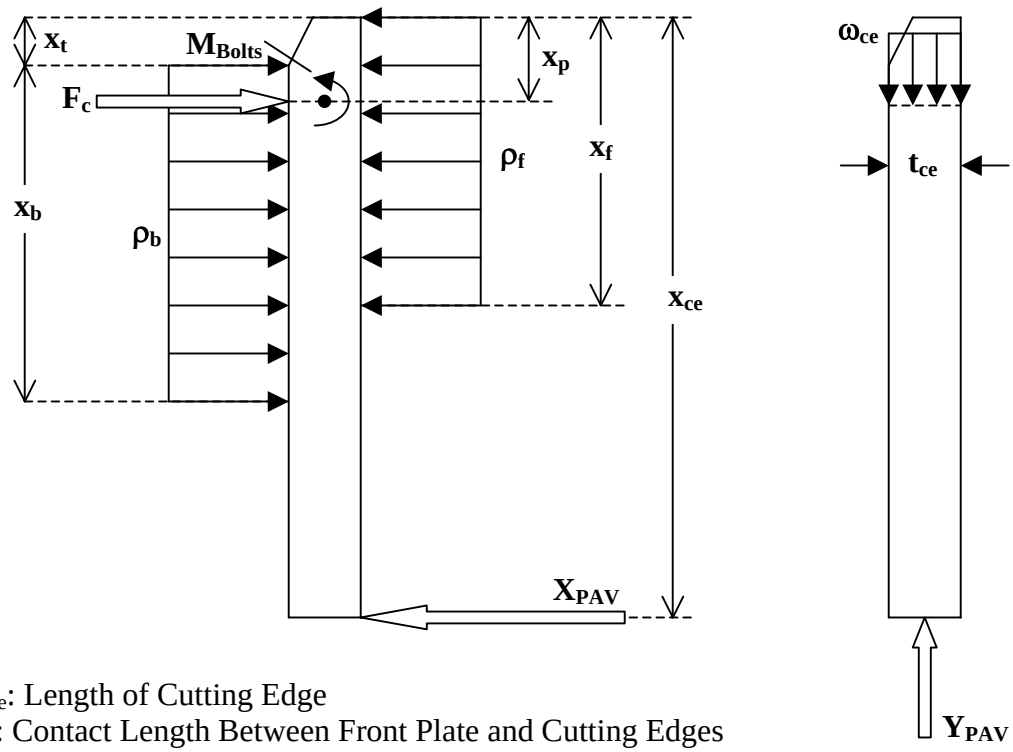

x_{ce}: Length of Cutting Edge
x_f: Contact Length Between Front Plate and Cutting Edges
x_b: Contact Length Between Moldboard and Cutting Edges
x_p: Distance from Top of Cutting Edge to Pin Holes
x_t: Tapered Length of Cutting Edges Top
t_{ce}: Cutting Edge Thickness

ρ_f: Distributed Load Applied to Front Plate
ρ_b: Distributed Load Applied to Moldboard
ω_{ce}: Distributed Load Applied to Pins and Bolts
F_c: Pressure Force Applied by Hydraulic Pins

M_{Bolts}: Moment Applied by 4 Fastening Bolts
$= (4/14)\ M_R$

Figure 6.4: Force Balance on Cutting Edges

A sum of forces and moments at static equilibrium yielded a set of relations that could be used to determine the forces acting on the moldboard, face plate, and pins. Although the variable names entered into EES varied depending on the specific loading condition, the general equation forms are included below.

Static Force Relations:

$\Sigma F_{horizontal}$: $-X_{PAV} - \rho_f x_f + F_c + \rho_b x_b = 0$ (14)

$\Sigma F_{vertical}$: $Y_{PAV} - \omega_{ce} t_{ce} = 0$ (15)

ΣM_B: $-X_{PAV} (x_{ce} - x_p) - (\rho_f x_f)(½ x_f - x_p) + M_{Bolts} + (\rho_b x_b)(½ x_b + x_t - x_p) = 0$ (16)

6.1.2.3 Moldboard Strength Analysis:

The general moldboard design did not changed drastically, but there was a significant difference in the nature of its loading. The effect of this new loading was unknown and so an in-depth strength investigation was necessary.

Although the moldboard featured several curved sections, it was modeled as a straight beam to facilitate analysis. The highest stresses will occur in the lower section of the moldboard because the top half is securely bolted to the front plate and free of high bending loads. The bottom section of the moldboard is modeled in Figure 6.5. This free end is treated as a cantilever beam with the fixed point occurring where the moldboard is bolted to the front plate; illustrated at this point are the internal shear and moment forces (V_b and M_b). Three other loads are shown. The distributed load of the cutting edge acting on the front of the moldboard (ρ_b), the distributed load of the hydraulic-spring support acting on the back of the moldboard (ρ_s), and an imaginary load (F_0 = 0 lbs) that will be used to find the deflection of the moldboard's tip. No "vertical" or transverse forces were included because the axial and shearing effects are overwhelmed by the bending stresses.

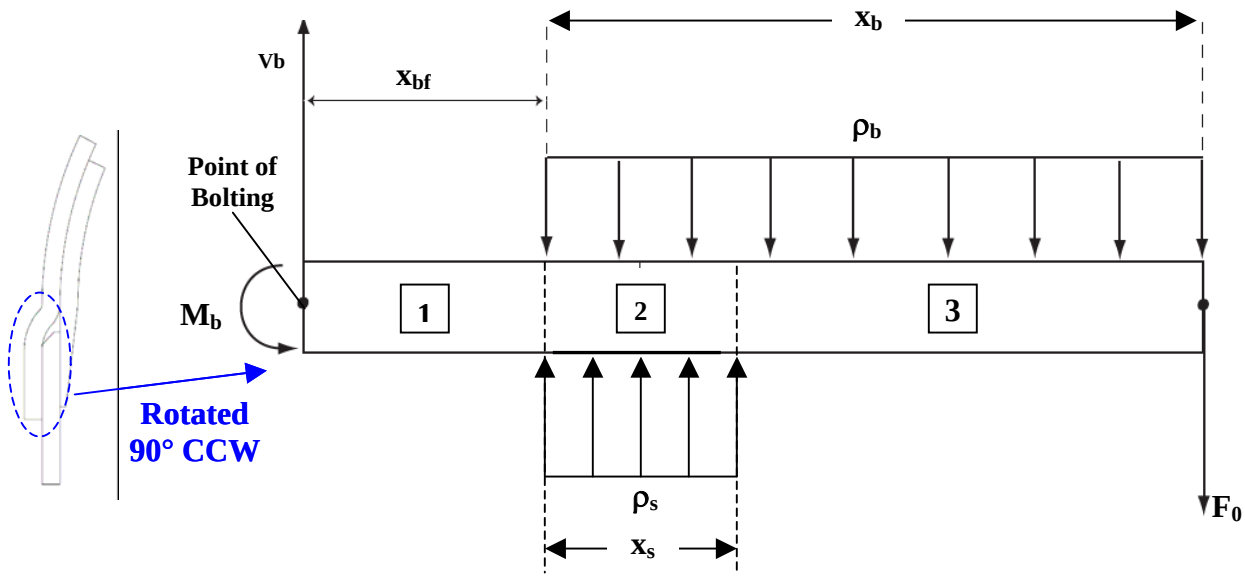

Figure 6.5: Force Balance on Simplified Moldboard Model

A force and moment balance yielded two equations, but one more relation was needed to solve for all the unknowns. A higher level force analysis on the plow assembly provided the needed information. The plow has two points of support: a long hinge welded near the top of the moldboard's back and the hydraulic-spring supports. Both supports allow rotation and so they only provide a reactive force (no moment). If the moldboard is again treated as a straight beam, the operational plow becomes a simple rectangular free-body with three forces acting at known distances. A sum of moments then gives the hydraulic-spring support force in terms of the horizontal pavement force (X_{PAV}). This can be translated into the distributed load (ρ_s) and the moment and shear forces can now be written in terms of known quantities.

$$\rho_s = \frac{(1.70)X_{PAV}}{x_s} \tag{17}$$

$$V_b = (\rho_b\, x_b) - (\rho_s\, x_s) + F_0 \tag{18}$$

$$M_b = (\rho_b\, x_b)(x_{bf} + ½\, x_b) - (\rho_s\, x_s)(x_p + x_{bf} - x_t) + F_0\,(x_{bf} + x_b) \tag{19}$$

The beam in Figure 6.5 is divided into three sections. Each section has a unique equation for the internal moment acting along its length. These relations were formulated as a function of x- the distance from the point of bolting.

$$M_1 = M_b - V_b\, x \tag{20}$$

$$M_2 = M_b - V_b\, x + ½\,(\rho_b - \rho_s)(x - x_{bf})^2 \tag{21}$$

$$M_3 = M_b - V_b\, x - (\rho_s\, x_s)(x - x_{bf} - ½\, x_s) + ½\,\rho_b\,(x - x_{bf})^2 \tag{22}$$

These equations were needed to calculate the beams deflection using *Castilgiano's Method*. *Castigliano's Method* relates the deflection of a beam to the change in energy within the beam based on the following formula:

$$\delta = \frac{\partial U}{\partial F} \tag{23}$$

δ: Deflection
U: Strain Energy
F : Applied Load at Point of Deflection

Castigliano's Method requires a force to be acting at the point of deflection and that is why F_0 was introduced at the beam's end. The necessary derivatives were taken with respect to F_0 and it was then set to zero. For this specific application, *Castigliano's Method* yields the following formula for deflection.

$$\delta_b = \frac{1}{EI}\left(\int_0^{x_{bf}} M_1 \frac{\partial M_1}{\partial F_0} dx + \int_{x_{bf}}^{x_{bf}+x_s} M_2 \frac{\partial M_2}{\partial F_0} dx + \int_{x_{bf}+x_s}^{x_{bf}+x_b} M_3 \frac{\partial M_3}{\partial F_0} dx\right) \tag{24}$$

δ_b: Deflection of Moldboard
E: Material Modulus of Elasticity
I: Area Moment of Inertia for Stressed Cross-Section

The necessary formulas were entered into EES and evaluated for the worst case loadings. The maximum deflection of the moldboard's tip was found to be:

δ_b = 0.009 inches

Such a small deflection supports the assumption that the moldboard will remain in uniform contact with the cutting edge and that the evenly distributed load is an appropriate force model.

Once the force model had been validated, it was then possible to investigate potential failure modes. The worst-stressed points were located at the bolting interface between the moldboard and front plate. The bolt holes created stress concentrations that magnified the effects of the internal bending moments. The stress was increased by a factor of K_t = 2.27 based on charts found in the *Juvinall and Marshak* text [15]. General engineering equations were used to calculate the stresses using the moment relations and the resulting expressions were evaluated for the different loading conditions. The basic formula used to calculate the bending stresses (σ_b) was:

$$\sigma_b = \frac{K_t M c}{I} = \frac{6(K_t M)}{L_b y_0^{\,2}} \qquad \text{L}_b\text{: Transverse Moldboard Length} \tag{25}$$

The material endurance limit (S_n) was also needed for fatigue analysis. This value was calculated from methods found in the *Juvinall and Marshak* text [15]. Calculation of the endurance limit essentially involves adjusting the material strength for specific fatigue conditions. The process is outlined below.

$C_{size} = 0.9$ for $y_b = 0.75$ inches

$C_{reliability} = 0.868$ for 95% reliability [15]

$C_{surface} = 0.79$ for cold worked [15]

$$S_n = C_{size}\, C_{reliability}\, C_{surface}(\tfrac{1}{2} S_{ut}) \qquad S_{ut} = \text{Material Ultimate Tensile Strength} \tag{26}$$

The moldboard was analyzed for static failure and yielding and in the four fatigue states. An engineering factor of safety was calculated in each case. The static factors were found with a straight comparison with the ultimate tensile and yield strengths. The *Modified Goodman Criteria* (described below) was used to find the fatigue safety factors. The results are included in Table 6.2.

Modified Goodman Criteria:

For: $$\frac{\sigma_a}{\sigma_m} > \frac{S_n (S_{ut} - S_y)}{S_{ut} (S_y - S_n)}, \qquad \frac{1}{n} = \frac{\sigma_a}{S_n} + \frac{\sigma_m}{S_{ut}} \tag{27}$$

For: $$0 < \frac{\sigma_a}{\sigma_m} < \frac{S_n (S_{ut} - S_y)}{S_{ut} (S_y - S_n)}, \qquad n = \frac{S_y}{\sigma_m + \sigma_a} \tag{28}$$

σ_a = Alternating Stress
σ_m = Mean Stress
S_y = Material Yielding Strength

Table 6.2: Moldboard Strength Engineering Safety Factors

Stress States	Factor of Safety (n)
Static Yielding	1.98
Static Failure	3.06
1.) Float Loading- Operational	3.07
2.) Float Loading- Toggle Up/Down	2.51
3.) Full-Download- Operational	1.88
4.) Full-Download- Toggle Up/Down	1.37

These values indicate that the moldboard will be able to safely withstand all predicted stresses. A static safety factor of 1.00 occurs when a component is subjected to stresses equal in magnitude to the material's yielding or tensile strength. Values greater than one suggest that the stresses will not reach critical levels and failure *should* not occur. However, proper engineering judgment generally recommends erring towards the conservative side and so yielding and failure coefficients of 1.98 and 3.06 are acceptable. Stresses would need to double before yielding occurred and triple before failure.

Fatigue safety factors calculated by the *Modified Goodman Criteria* operate in a slightly different manner. The endurance limit is essentially the cut-off between infinite and finite life in fatigued parts. A safety factor greater than one indicates that the predicted stress values do not reach the endurance limit and the component *should* withstand an infinite number of fatigue

cycles without detrimental effects. If the value is less than one, another step is required to determine the number of cycles before failure. At the endurance limit, the finite life is one million cycles. The existence of this large finite life buffer and the conservative nature built into the *Modified Goodman Criteria* mean that any fatigue safety coefficient greater than one can be considered safe. This is the case for the moldboard.

6.1.2.4 Front Plate Analysis:

Analysis of the front plate was conducted in a very similar manner to that of the moldboard. The lower, overhanging section was again the focus of the investigation and was treated as a cantilever beam. The basic force model is pictured in Figure 6.6. Most of the same forces have been included: the internal shear and moment forces (V_b and M_b), the distributed cutting edge load (ρ_f), and the imaginary force (F_0). The front plate, however, is free hanging and there is no support force. Another important difference lies in the front plate's geometry. The front plate is tapered down its length and so the thickness (and area moment of inertia) will vary depending on the x-location.

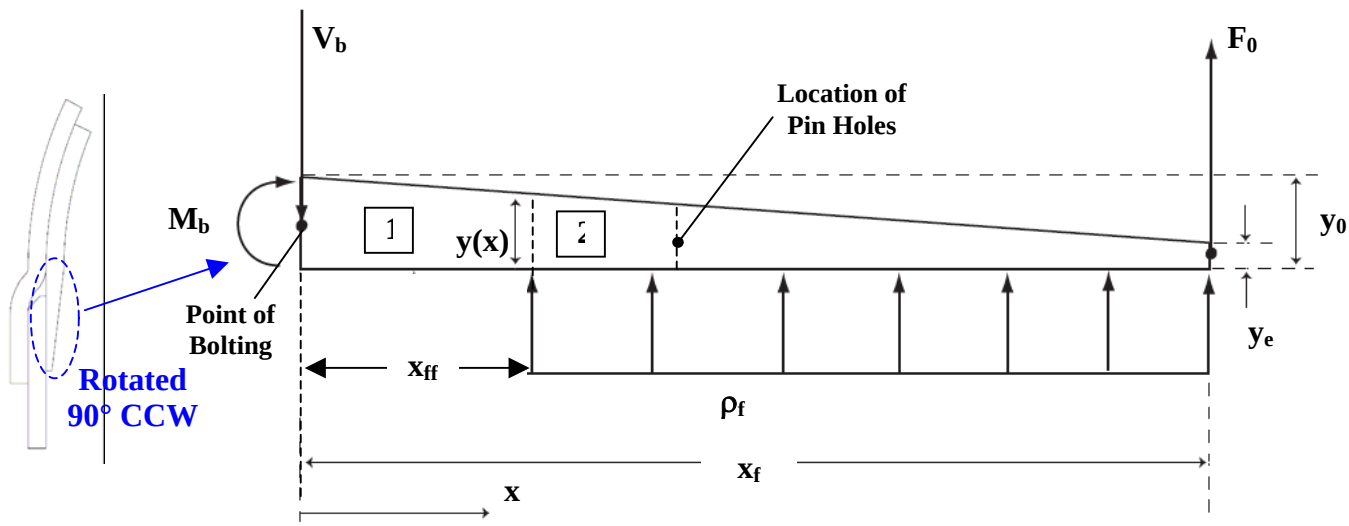

Figure 6.6: Force Balance Simplified on Front Plate Model

Static force and moment balances provided enough relations to solve for all the unknowns and the following expressions resulted:

$$V_b = \rho_f x_f + F_0 \quad (29)$$

$$Mb = \rho_f (\tfrac{1}{2} x_f^2 + x_f x_{ff}) + F_0 (x_f + x_{ff}) \quad (30)$$

This beam only has two sections for moment analysis and application of *Castigliano's Method* again supplied the deflection of the beam's tip. The specific moment and deflection equations were found as follows:

$$M_1 = M_b - V_b\, x \tag{31}$$
$$M_2 = M_b - V_b\, x + \tfrac{1}{2}\, \rho_f\, (x - x_f)^2 \tag{32}$$

$$\delta_f = \frac{1}{E}\left(\int_0^{x_{ff}} \frac{M_1}{I(x)} \frac{\partial M_1}{\partial F_0} dx + \int_{x_{ff}}^{x_{ff}+x_f} \frac{M_2}{I(x)} \frac{\partial M_2}{\partial F_0} dx \right) \tag{33}$$

I(x): Area Moment of Inertia Calculated Based on y(x)

The proper relations were substituted and the whole expression was integrated along the beam's length. The highest load values were used. The maximum deflection seen at the front plate's tip was found to be:

$\delta_f = 0.020$ inches

The deflection of the front plate would not have any significant effect on the interaction of the front plate and cutting edge, so analysis continued with the assumption that the cutting edge load would remain evenly distributed along the contact length.

The front plate had two potential worst-stressed locations. The first was at the moldboard-front plate bolting interface- due to the stress concentration and high bending loads. The second was found at the pin holes. Although the bending loads are lower at this location, the reduced thickness leads to a relative increase in the stress experienced. This is then further magnified by the stress concentration seen at the hole. Comparison of the potential stresses for each location demonstrated that the bolt hole would experience higher stress levels for the likely range of dimensional values. Subsequent analysis focused on the stress at this point. The following expression was used to calculate this stress, with K_t again set equal to 2.27 [15].

$$\sigma = \frac{K_t M c}{I} = \frac{6(K_t M)}{L_f\, y_0^{\,2}} \qquad \text{L}_f\text{: Transverse Front Plate Length} \tag{34}$$

The same endurance limit was used and analysis of the static and fatigue states followed the same methods as with the moldboard. The results were a series of engineering safety factors. These values are listed in Table 6..

Table 6.3: Front Plate Engineering Safety Factors for Various Loading Conditions

Stress States	Factor of Safety (n)
Static Yielding	1.40
Static Failure	2.15
1.) Float Loading- Operational	2.16
2.) Float Loading- Toggle Up/Down	1.39
3.) Full-Download- Operational	1.52
4.) Full-Download- Toggle Up/Down	0.97

The static values were well within the acceptable range. The front plate would need to experience stresses nearly one and half times those of the worst case loading before the onset of yielding. The only potential for this to occur would be with plow misuse (which hopefully will be avoided). The first three fatigue cases showed no indication of failure, but the fourth required further analysis. A modified form of equation (27) was used to find the fatigue strength (S_f) for the specific mean and alternating stresses. This value was then substituted into another relation to find N_f- the front plate's cycle lifetime. The process and results are outlined below.

$$1 = \frac{\sigma_a}{S_f} + \frac{\sigma_m}{S_{ut}} \tag{35}$$

$$\log[S_f] = \frac{1}{3}\log\left[\frac{S_n}{0.9S_{ut}}\right]\log[N_f] + \log\left[\frac{(0.9S_{ut})^2}{S_n}\right] \tag{36}$$

N_f = 762,810 cycles

The fatigue cycle for case four was defined as the application and release of full-download in transition from stowed position. In order for the front plate to reach the failure lifetime, the plow would need to be toggled to full down pressure 20 times a day for over 100 years. This seems unlikely and so the front plate should be able to safely operate under all expected loading conditions.

6.1.2.5 Support Pin Analysis:

Several different types of pins are used to support the vertical loading experienced by the cutting edges. Figure 6.7 illustrates simplified load models for the three pin designs. The pins and bolts are fairly well distributed along the plow's length and so it was assumed that each would support an equal share of the vertical load (one-thirteenth). If each pin is subjected to the same load, pin type 3 would see the highest levels of stress. The fillet at the diameter change creates a stress concentration that will magnify the effect of bending loads. Pin type 1 has a similar fillet, but support from the front plate reduces the bending moments experienced in the pin design.

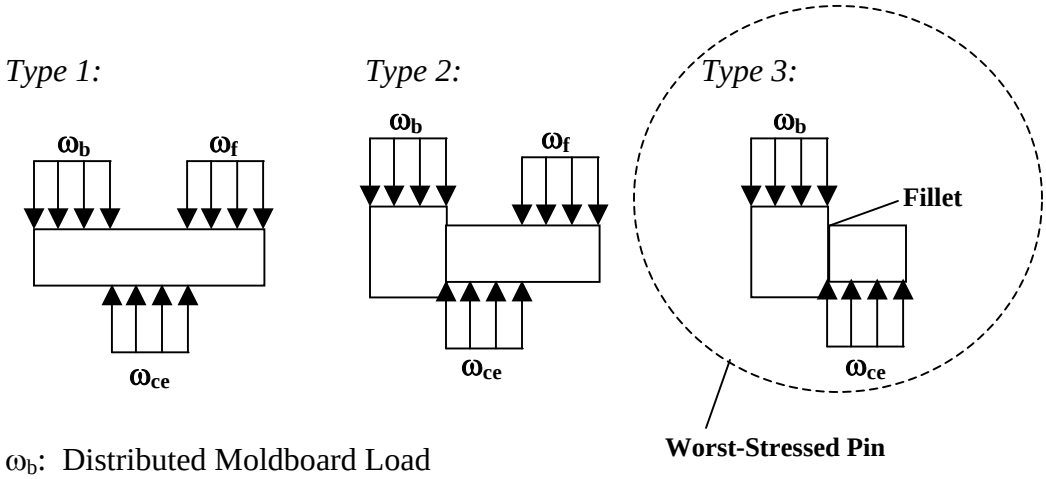

ω_b: Distributed Moldboard Load
ω_f : Distributed Front Plate Load
ω_{ce}: Distributed Cutting Edge Load

Figure 6.7: Simplified Support Pin Loadings

The loadings in Figure 6.7 do not include the compressive force experienced by the multipurpose pins as they apply pressure to the back of the cutting edge. The effects of this force were minor when compared to those of the bending and shearing forces and so they were neglected.

It was determined that the highest stresses would occur at the cross-section where the diameter and loading change. Analysis of this situation was simplified by treating the pin's end as a beam cantilevered at this cross-section. The resulting model can be seen in Figure 6.8. Also included are the equations for the internal shear and moment forces.

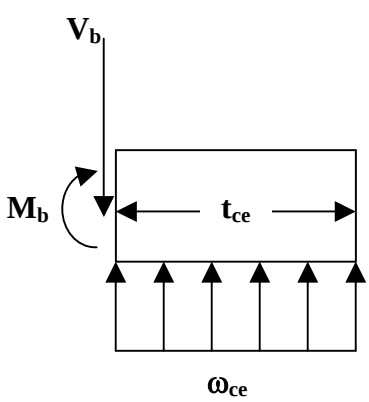

$$V_b = \rho_{ce}\, w_{ce} \qquad (37)$$
$$M_b = \tfrac{1}{2}\, \omega_{ce}\, w_{ce}^2 \qquad (38)$$

Figure 6.8: Pin 3 End as Cantilever Beam

The tolerances on the pin holes prevent significant deflection and so *Castigliano's Method* was not applied for this case. However, before the failure modes could be investigated, the dominating stress state needed to be identified. Basic variable calculations and ratio comparisons demonstrated that the maximum bending stress (acting at the fillet) was nearly five times larger than the maximum shearing stress (acting at the pin's center axis). Accordingly, equation 37, listed below, was used to calculate potential failure stresses. Since the stress was

occurring at a fillet, the stress concentration factor had to be further adjusted for fatigue loadings. This fatigue stress concentration factor (K_f = 1.68) was used in analysis of Cases 1-4. Stresses for static yielding and failure were multiplied by the general factor, K_t = 1.82 [15].

$$\sigma = \frac{K_{t,f} Mc}{I} = \frac{32(K_{t,f} M)}{\pi d_m^{\ 3}} \qquad d_m\text{: Smaller Diameter of Support Pin} \qquad (39)$$

Although the pin component had a significantly different geometry and was machined instead of cold drawn, the endurance limit was calculated in a very similar manner to that of the moldboard and front plate. The process was as follows:

C_{size} = 0.9	for d_m = 0.625 inches	
$C_{reliability}$ = 0.814	for 99% reliability	[15]
$C_{surface}$ = 0.73	for machined surface	[15]

$S_n = C_{size}\, C_{reliability}\, C_{surface}(\,½\, S_{ut})$ $\qquad$ S_{ut} = Material Ultimate Tensile Strength

The same methods as in the previous two sections were applied in analysis of the static and fatigue stress states. The resulting engineering safety factors have been listed in Table 6..

Table 6.4: Pin Engineering Safety Factors for Various Loading Conditions

Stress States	Factor of Safety (n)
Static Yielding	1.82
Static Failure	2.15
1.) Float Loading- Operational	2.45
2.) Float Loading- Toggle Up/Down	1.84
3.) Full-Download- Operational	1.52
4.) Full-Download- Toggle Up/Down	0.98

The safety factors for the worst stressed pins led to similar conclusions to those of the front plate. The static coefficients again fell within a reasonably safe range, with even more leeway given before yielding thanks to stiffer material properties. Further analysis of fatigue case four provided a fatigue life of 881,115 cycles, which was again much greater than the useful life of the product. The pin design therefore met all strength requirements.

6.2 Prototype Construction

A Quick Edge prototype underbody plow was constructed for testing and demonstration purposes. A photo of the prototype on a demonstration stand (missing the hinged, top plow piece) is included in Figure 6.8. Prototyping followed the final design specifications, but several design changes were necessary. This section highlights some of the most important aspects of the process.

Figure 6.9: Photo of Quick Edge Prototype

Some difficulty was encountered in production of the prototype moldboard. A local manufacturer, Moorhead Machine and Boiler, was capable of bending 11' long ¾inch steel plates, but they could not produce the specified "s" bend. The solution was to split the prototype moldboard into two pieces which could be welded together after bending and trimming. A comparison of the final design and prototype moldboard can be found in Figure 6.9. Moorhead Machine and Boiler also bent the front plate and plow top extension. Outside of the large plate bending, all machining was performed by the University of Minnesota Mechanical Engineering Research Machine Shop. Detailed drawings were provided and the shop produced the moldboard, front plate, pin plates, and hydraulic supports.

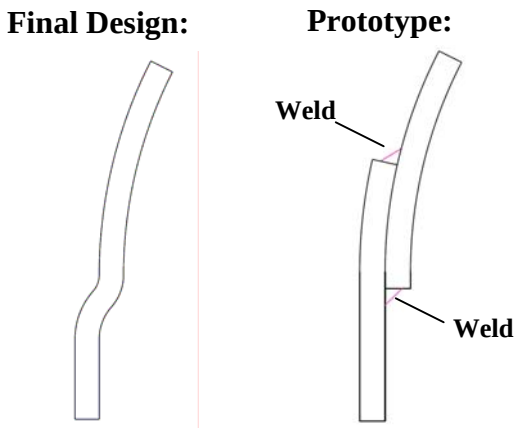

Figure 6.10: Final Design and Prototype Moldboard Comparison

One goal of the prototype was to minimize downtime on the test truck through modularity. The Quick Edge prototype was designed to mount directly to the Roots underbody frame already fixed to most of the International plow trucks. The Quick Edge moldboard/plow assembly is interchangeable with the Roots moldboard assembly and attaches at three points. The four spring-loaded hydraulic supports bolt to the bottom of the Quick Edge moldboard. The pivot shaft runs through tubes welded to the top of the Quick Edge moldboard. And the plow top extension connects to a linkage arm. This moldboard mounting configuration is illustrated in Figure 6.10. The Quick Edge prototype can then be attached and replaced with "minimal" effort. The test truck's underbody system before, during, and after the moldboard switch is pictured in Figure 6.11 through Figure 6.13.

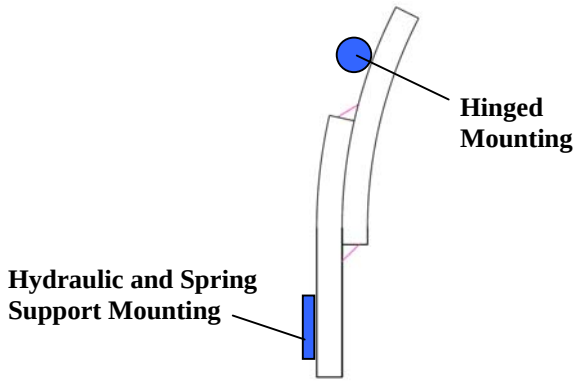

Figure 6.11: Prototype Moldboard Mounting

Figure 6.12: Test Underbody before Moldboard Replacement

Figure 6.13: Test Underbody without Moldboard

Figure 6.14: Test Underbody with Prototype Moldboard

The choice of hydraulic cylinders used in the prototype was largely driven by availability and cost. The minimum stroke requirement was 1.25inch and the cylinders needed to produce a force of around 10,000 lbs at 1800 psi. However, minimizing the cylinder length was also very beneficial. Procurement of ideal cylinders would have required several months of lead-time and increased costs, so a near fit was purchased from local supplier, Quadra Trading Corp. The hydraulic cylinders used in the prototype were surplus 2.5inchx 4inch double-acting cylinders rated at 2500 psi. They featured top-mounted SAE #4 ports and had a threaded rod end that allowed for easy mounting of the pin plates. The hydraulic support design was altered to accommodate these cylinders.

The remainder of the prototype's hydraulic system was designed with modularity in mind. The assigned test truck was equipped with the Force America Add-A-Fold hydraulic distribution system, but all of the valve blocks were already in use. Instead of tapping into one of the subsystem feeds and potentially interfering with the truck's normal operation, a separate DC hydraulic power source was purchased from Force America. This hydraulic unit was mounted to the frame underneath the passenger cab as shown in Figure 6.14. Pirtek USA provided the fittings and quarter inch hose and two basic aluminum manifolds were purchased from A1 Manifolds. A pressure gauge was also included to monitor the pressure provided by the power unit. Included in Figure 6.15 is a hydraulic schematic for the prototype system. Figure 6.6 pictures the mounted cylinders and manifolds behind the moldboard.

Figure 6.15: Hydraulic Power Unit Mounting

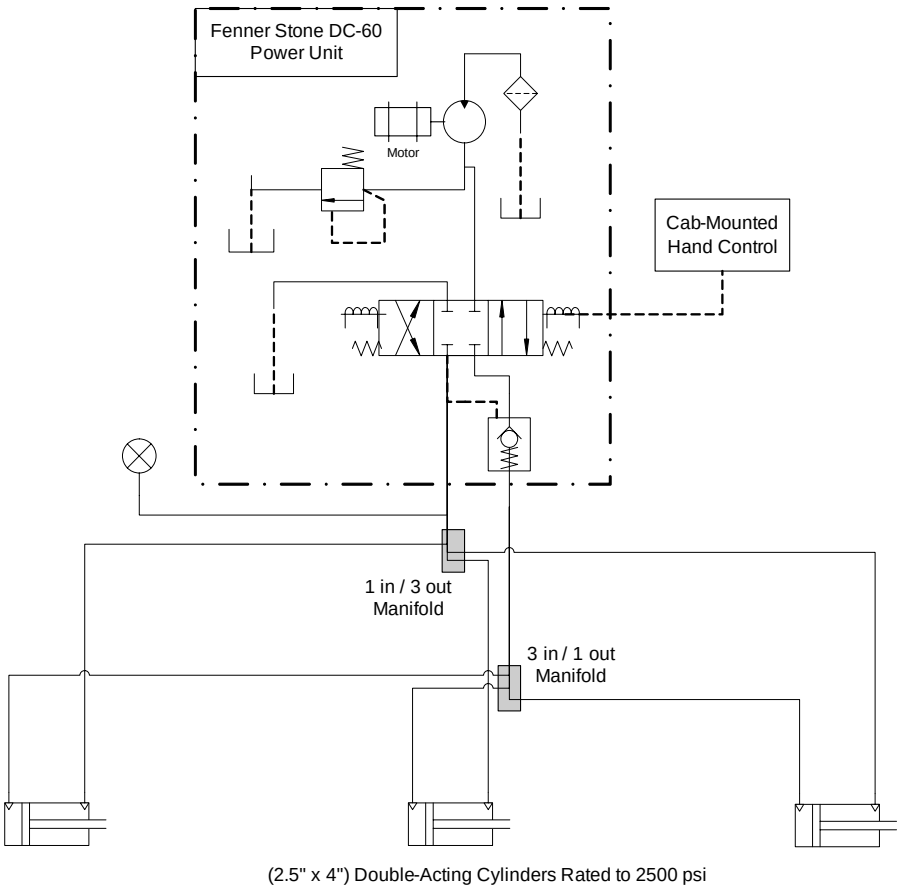

Figure 6.16: Prototype Hydraulic Schematic

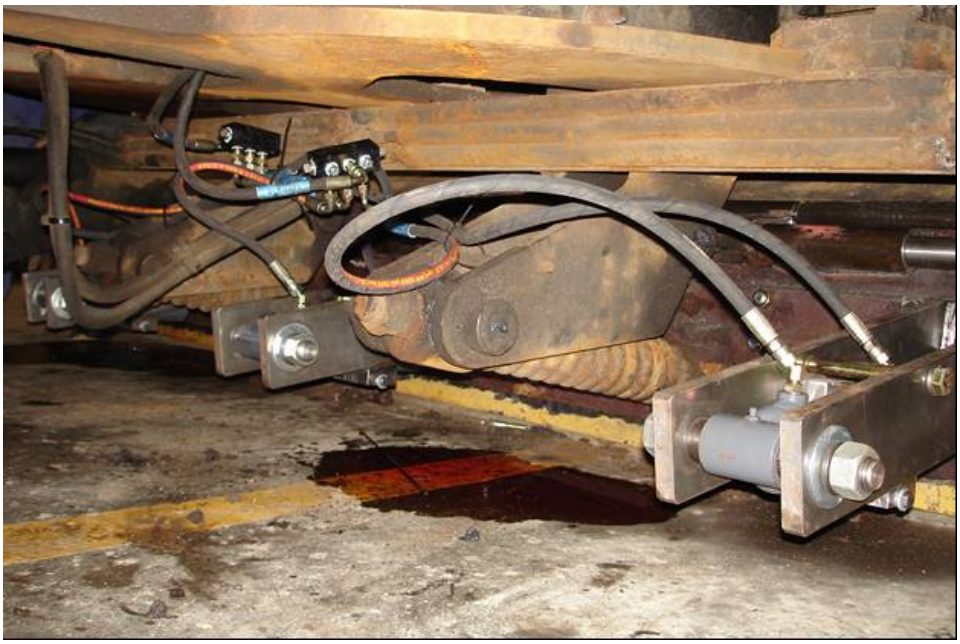

Figure 6.17: Prototype Cylinder and Manifold Mountings

6.3 Cost Analysis

This section discusses the costs associated with construction of the prototype and final product and the potential monetary benefits gained from utilizing the Quick Edge system. Complete bills of materials (BOM's) and pricing for the prototype and final design can be found in Appendix G.

Construction of the Quick Edge prototype ended with a price tag of $10,140. The project charter had initially budgeted $4320 for materials and labor and so this large cost differential was pulled from the salary budget and extra funds procured from Dr. Shankwitz's Intelligent Vehicle Lab's operational budget. The cost overrun occurred during custom production of the Quick Edge components. The University of Minnesota research shop was not very well equipped to handle parts of this size and several miscommunications led to much greater machining costs than initially anticipated. However, the work was completed and a working prototype was produced.

Machining and production will be the driver for the final design costs. However, companies such as *Root Spring Scraper Co.* will already have the manufacturing capabilities to easily produce and assemble the Quick Edge components with only minor tooling changes. It is therefore estimated that the Quick Edge adaptations will result in only a $1779 increase to the final underbody plow cost. This is a minor increase when weighed against the potential benefits.

There will be two sources of monetary gain produced by the Quick Edge system. The most apparent is the reduced labor and supply costs that will result from the simplified replacement process. Average wage with benefits for a transportation generalist is $25.83 per hour. Regardless of condition, all bolts, nuts, and washers are replaced with each cutting edge change at an average price of $1.30 per set. Ten fewer bolts will be required for the new system. In addition, general shop supplies (rags, oxygen, acetylene, etc.) are expensed at a rate of ten percent of the labor costs. Under Ideal conditions, two workers can replace a set of cuttings in 30 minutes (one equivalent labor hour). However, it is not uncommon that a cutting edge change requires up to four equivalent labor hours. It is expected that one laborer can complete a cutting edge change in 15 minutes when fully utilizing the Quick Edge system. Assuming that workers will be productive in other areas when finished, the new system will create cost savings ranging from $62.73 to $233.20 per cutting edge change. It would accordingly take between about 8 and 28 cutting edge replacements to recoup the cost increase associated with the Quick Edge system. This is certainly a realistic range to achieve across the life of an underbody system. However, this is just half of the gain. Additional (and potentially more important) benefits will be seen in the reduction of worker compensation claims. Workers performing cutting edge changes are prone to back, hand, head, and burn injuries, but the Quick Edge system would greatly reduce this risk by minimizing the time spent in vulnerable positions. Although the supporting financial data was not available, it is logical that reduced lifting, torching, and time spent crawling beneath plow trucks would equate to a decrease in related worker injuries and an overall increase in shop morale (both benefits that cannot be measured by dollar value alone).

6.4 Testing

The Quick Edge prototype was constructed to test the operational performance of the design. In spring 2005, it was assembled on a demonstration stand and controlled with a pneumatic power source. The design was functional during mock cutting edge changes. Minor binding occurred between several pin-hole surfaces due to slight misalignment, but the hydraulic power source has significantly higher pressure and is able to fire and retract the pins with ease.

In January 2006, the prototype was mounted to an in-service truck at the Golden Valley Mn/DOT facility. The prototype had no difficulty retrofitting to the existing underbody assembly and the hydraulic system functioned as expected. Little time was needed to attach the carbide cutting edges to the underbody. Unfortunately, the rest of the process was so quick, that worker was only photographed during the brief period needed to mount the center cutting edge beneath the truck, as pictured in Figure 6.17.

Figure 6.18: Prototype Cutting Edge Change

Once the prototype was properly installed, the truck's drivers (pictured in Figure 6.18) made some trial runs on the short test-track behind the facility. An action photo is also included in Figure 6.19. The prototype performed as expected with no major problems. Accordingly, the prototype will remain on the truck and evaluation will continue throughout the remainder of the 2006 winter season.

Figure 6.19: Test Truck Drivers with the Quick Edge Prototype

Figure 6.20: Quick Edge Prototype Kicking up Gravel

Chapter 7
Conclusion and Recommendations

The Quick Edge system is an innovative design which fulfills the project objectives while adding many other benefits. One of the main design emphases was reduction in time and manpower required for underbody cutting edge changes. This was accomplished by replacing a majority of the cutting edges' bolted fasteners with a hydraulic pinning and clamping mechanism. A closely related goal was to minimize the risk of worker injury during cutting edge replacement. The worker is at greatest personal risk while maneuvering beneath the truck and so the Quick Edge design attempts to lessen the need for workers to operate bulky and dangerous equipment in such confined spaces. With the aid of a simple stand, the maintenance worker will only need to make slight adjustments to the cutting edge positions and insert six pins while beneath the truck.

In addition, the Quick Edge system was designed with modularity in mind. The design mimics many aspects of the original Roots underbody snowplow in an attempt to avoid compromising the plow's performance and to simplify manufacturing and maintenance migration. The hydraulic components are also intended to operate on the standard International hydraulic feed. Therefore, trucks with existing underbody snowplows should be compatible with the Quick Edge system, opening the potential for conversion.

Utilizing the new underbody system will result in a reduction in labor and material costs for cutting edge replacements that was valued at $62.73 to $233.20 per cutting edge change, but much benefit will also be recognized in the reduction of labor related injuries. This will lessen the frequency of worker compensation claims, but more importantly, increase worker morale. The estimated increase in cost of a complete underbody system with Quick Edge modifications is only $1779. This cost will certainly be outweighed by the benefits the system provides.

Although the Quick Edge system was a successful solution, like any design, there is always room for improvement. Much of the risk of injury associated with cutting edge replacement is reduced with the new design, but potential problems exist in simultaneous release of all three cutting edges. Use of a stand for the cutting edges will ensure they do not drop a dangerous distance and will create a physical deterrent to keep workers from harm's way. Also, cautionary measures must be put in place to ensure that no workers are near the falling cutting edges or pinch points when the support pins are retracted or fired. A strict list of guidelines and procedures should be put in place for maintenance workers to follow as they walk through a cutting edge change.

Several physical design changes have also been suggested by a number of interested parties. One of the most important is incorporation of locking safety pins. Although the pin plates' natural weight and binding within the pin holes should keep the support pins in place if there is loss of hydraulic pressure, there is still concern over cutting edges dropping onto the highways. A simple solution is the addition of safety pins that can be inserted as a hard stop to ensure the pin plates cannot retract.

On advice from Mn/DOT, the Quick Edge system was designed for their standard three section cutting edge configuration. Simplification of the design can be achieved by using a single cutting edge section. An eleven foot cutting edge will accommodate a more uniform pin plate design and although a larger cutting edge will be more difficult to transport and maneuver, it can be pushed under the truck and then raised into position, one side at a time, without a worker having to crawl beneath the truck.

Plow drivers already have a lot of distractions and monitoring the pressure on the pin plates may not always be their top priority. Therefore, incorporation of an automated pressure check into the hydraulic system could be very beneficial.

A final weakness of the design is the overall weight. Emphasis was placed on functionality and strength and one of the side effects was a significant increase in underbody weight. Alternate moldboard designs produced from thinner plates with reinforcement at weak points is a potential solution.

Basic testing has already demonstrated acceptable performance and so now field operation will be measured. Results and suggestions obtained from this process can be used to further improve the Quick Edge underbody design.

This project has already been presented to several parties at Mn/DOT and the University of Minnesota and the reactions were very positive. Future work and development on Quick Edge are uncertain, but inquiries into patenting have been made. Overall, the project was a great success.

References

1. Nixon, Wilfrid A., Frisbie, Todd R. "Field Measurements of Plow Loads during Ice Removal Operations." Iowa Institute of Hydraulic Research, University of Iowa, 1993.

2. Nixon, Wilfrid A., Potter, James D. "Measurements of Ice Scraping Forces on Snow-Plow Underbody Blades." Iowa Institute of Hydraulic Research, University of Iowa, 1997.

3. *Snow and Ice Facts* <http://www.dot.state.mn.us/workzone/winterfacts.html> (22 April 2005), Minnesota Department of Transportation.

4. "Fluid power speeds metalwork clamping," Machine Design, November 18 1999, 126.

5. "Modeling forces on trucks plowing snow," Automotive Engineering International, July 1998, 125-8.

6. "Public works takes the high-tech road," Design News, April 5 1993, 25-6.

7. "Setting up that snow plow- a pro looks at the do's and don'ts," Public Works, July 1994, 34-5.

8. "Some innovations in snow and ice control equipment," Public Works, March 1995, 34-35.

9. "Technology steps up to meet changing winter maintenance needs," Public Works, April 2002, 202-5.

10. "They can live together: manholes and snowplows," Public Works, April 2002, 20-1.

11. Nixon, Wilfrid A. "Improved Cutting Edges for Ice Removal." Iowa Institute of Hydraulic Research, University of Iowa, 1993.

12. Kempainen, Alan J. "Experimentally Measuring and Modeling Forces on a Truck Frame Due to Plowing Snow." Michigan Technological University, 1997.

13. Sweere, Kevin E. "Improving the Midmounted Moldboard Snowplow Truck: A User Based Approach." Michigan Technological University, 1996.

14. Olson, W.W., Osborne, M.D. "Dynamic Modeling of a Truck Equipped with an Underbody Mid-mounted Snowplow Blade." Transportation Research Institute, University of Michigan, 1995.

15. Juvinall, Robert C., Marshek, Kurt M. Fundamentals of Machine Component Design, 3rd Ed. Hoboken, NJ: John Wiley & Sons, 2000.

16. Shigley, Joseph E., Mischke, Charles R. "Screws, Fasteners, and the Design of Nonpermanent Joints." In Mechanical Engineering Design, 6th Ed., 466-477. Boston, MA: McGraw Hill, 2001.

17. Bailey, Charles A. "Section 10: Basic Hydraulics." In The Lubrication Engineers Manual, 2nd Ed., 358-400. Pittsburgh, Pa: Association of Iron and Steel Engineers, 1996.

18. *I-66 Snowplow with Folding Moldboard* <http://www.rootsnowplows.com/i66snopwitfo.html> (5 September 2005), Root Snow Plows.

Appendix A

Shop Visit Survey Summary

Visit Description:

In February 2004, I met with John Tarnowski and Ben Zwart at the Mn/DOT Golden Valley maintenance shop. We observed a cutting edge change on one of the standard moldboards. I was also given the chance to ask the maintenance workers some questions. The results of my visit are summarized below.

Notes on Cutting Edge Change Process:

1. The process required 2 maintenance workers.
2. A hydraulic lift was placed under each of the 4 truck tires and the vehicle was raised to about shoulder height. The workers could easily stand beneath the truck, but were required to hunch or bend slightly.
3. One of the workers estimated that of the 130 maintenance shops in Minnesota, only about 20 have hydraulic lifts to raise the trucks during cutting edge replacement.
4. A pneumatic torque wrench was used to remove the nuts from the bolts. This was quick and easy for unobstructed/undamaged bolts.
5. Each bolt was locked with 2 nuts (creates same effect as lock nut).
6. A set of three cutting edges was on the 11 ft moldboard. A total of 14 bolts were used to hold them in place.
    a. 1 x 3 ft cutting edge ➔ 4 bolts
    b. 2 x 4 ft cutting edge ➔ 5 bolts
7. One of the cutting edges was cracked in half and some of its bolts were damaged. This was not a common occurrence and most likely result from driver misuse.
8. One worker held each cutting edge as the other removed the bolts. Once the edge was free, it was lowered to the ground. The cutting edges were obviously quite heavy.
9. Each of the 4 spring/cylinder supports was held on by 2 bolts. One of these bolts also passed through to hold on a cutting edge. This created a bit of confusion and difficulty in cutting edge removal. Viewing from the back it was difficult to visualize which of the support bolts needed to be removed and the workers had to duck under the moldboard several times to ensure they chose the right bolt. Also, the nuts were only about ½" from the support and it was difficult to correctly position the torque wrench.
10. Two bolts needed to be burnt off. One bolt was damaged and bent at some point during the plows operation and the torque wrench could not be applied. The other had its threads stripped by the torque wrench. An acetylene torch was used to heat the bolts/nuts until they were red hot and they were struck with a wrench. The bolts would break in half and fall to the ground. I was told to stand far back and "be careful." I could see red-hot shards of metal fall at the maintenance worker's feet as he torched the bolts. It did not appear to be very safe.
11. The old cutting edges, bolts, and nuts were discarded.
12. The process of mounting the new cutting edges was as follows:
    a. One worker held the cutting edge in position.
    b. The other worker inserted the bolts and hand-tightened the nuts until they fit semi-snuggly.
    c. Each cutting edge was mounted separately.

d. Once ALL bolts were inserted and hand-tightened, the torque wrench was used to firmly tighten the bolts. A 450-500 ft-lbf torque was used.

13. In order to remedy some of the problems encountered with the support interference, several bolts were placed in backwards (bolt head on the back of the moldboard and nuts and threads sticking out the plow's face). This allowed the workers to tighten down the nuts with obstruction of the torque wrench.
14. The whole process (from raising the truck to cutting edge mount completion) took about 45 minutes. This was mainly due the problems encountered in bolt removal, but I served as a bit of a distraction. The workers said that if no problems were encountered, an experienced maintenance worker could complete cutting edge removal and mounting in 10-15 minutes.

Results Summary of Questions for Technical Lead and Maintenance Workers:

What underbody plow brands/models do you use?

Looking around at the trucks in the shop, it appeared that there were several underbody plow models being used. However, a majority of the shops in Minnesota use the Roots I-66 model and this is the design I should focus my efforts on.

Should I investigate modifications to side-wing or front-mounted plows?

The underbody plow is my priority, but I can make suggestions for the others.

What types of cutting edges are used?

There were several different types of plow blades in the shop. They varied in length, height, shape, and material composition. The Golden Valley shop was transitioning to use of Kennametal carbide-inserted cutting edges for a majority of their plowing applications, but they were using up the left-over inventory of the other blades. Each shop has its own blade contract and has preferred blade can vary. I should design the new system for use with Kennametal carbide-inserted cutting edges. John Tarnowski was going to send me information on the cutting edges used.

What speeds is the underbody snowplow used at?

15-20 mph for shoulders

30-35 mph for standard roads

What control does the driver have over the underbody plow?

The driver can raise and lower the plow. Rotate its angle with the direction of travel. And control the downward pressure applied to the road.

What feedback does the driver receive from the underbody plow?

Newer trucks have a pressure gauge displaying the pressure in the hydraulic lines, but most of the trucks do not provide any feedback to the drivers. They must visually determine the plow's position and estimate the down pressure being applied by noise and relative lift felt in the cab (float position = hear the blade contact the ground, full down pressure = when enough pressure is applied, the truck experiences a slight lift).

How much pressure is applied during plowing?

When the underbody plow is used, it is almost always in float position. Full down pressure is only used for brief periods. Line pressure is 100 psi for float position and 300 psi for full down pressure.

Is the underbody plow used for anything besides ice-scraping and snow plowing?

It is sometimes used to clear sand and debris from the roads.

How often do the cutting edges need to be changed?

One maintenance worker said that some of the new carbide-inserted cutting edges can last for more than two winters.

How big of a problem is bolt failure?

It sounded like it was almost nonexistent. One of the cutting edges that was changed had been cracked in half and had a sheered bolt. However, the maintenance worker said that he had been there for six years and that was first failed bolt he had seen and the damage was most likely caused by driver misuse. The driver was most likely plowing at unsafe speeds and the plow struck an object on the shoulder.

Do any other components on the underbody assembly experience excessive wear?

No. The moldboard assembly is quite sturdy and only requires general maintenance. The entire assembly is usually replaced after its useful life.

What sort of damage occurs to the underbody system?

Damage to the underbody plow is very rare. Except for general wear, even damage to the cutting edges is uncommon. However, I did note two occurrences of damage. The broken cutting edge has already been described. I also saw a moldboard that exhibited road-wear. Apparently, the cutting edges were not replaced in time and had been worn down so much that the moldboard was in contact with the road. In addition, this caused a crack beneath one of the bolt holes. This moldboard had been welded and was still in full-use.

How do drivers deal with road obstacles?

If the driver sees the obstacle coming, they will generally slowdown and raise the underbody plow. However, the underbody system also features some spring supports on the back of the moldboard that will give when there is excessive forces.

What type of hydraulic systems are on the plow trucks?

The hydraulic system depends on the truck model. The vendor should be consulted to get the specifics.

Underbody Setup Measurements:

Blade Angle: Float:	$\alpha = 2°$		
Full Down Pressure:	$\alpha = 3°$		
Attack/Cast Angle:	$\gamma \sim 35°$	,	Ranged from 30°-50°

*Took home two standard, high-strength carriage bolts for measurement.

Summary/Reflections:

My overall impression of the cutting edge change was that not as much emphasis needs to be placed on complete elimination of bolting. Many of the problems involved were more a result of poor placement of bolting holes and the number used (very few bolts experience failure and this suggests over-engineering). The greatest threat to time and worker safety appeared to be the torching of the problem bolts. An acetylene torch was used to essentially melt problem bolts off of the frame. Just removing the nut with a torsion wrench was quite fast. The workers estimated that without running into any problems the current process may take only 10-15 minutes (this did not seem to be the norm, however). An important factor is that the change I witnessed was done with the aid of lifts that brought the truck to shoulder level. One of the workers guessed that only about 20 of the 130 shops in Minnesota had such lifts. This meant cutting edge changes were a lot more difficult (and thus time consuming and dangerous) in most of the rest of the state. The workers must perform everything I witnessed, but do so while crawling beneath the truck. This greatly increased the danger involved in torching, as the worker is subjected to a barrage of red-hot metal fragments in a very confined space. Any increase to the time required increases the chance of injury. Elimination and reduction of the processes required will be an improvement.

Appendix B

Quick Edge Engineering Drawings

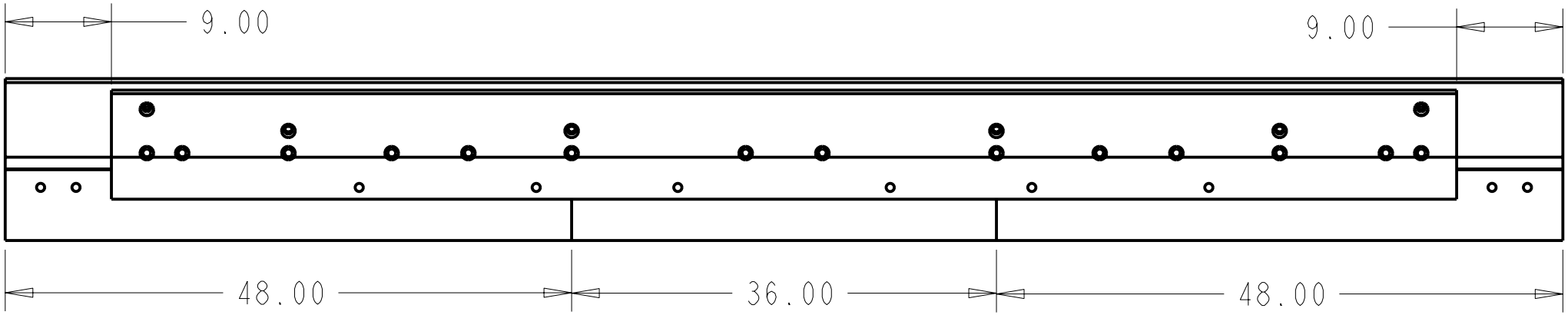

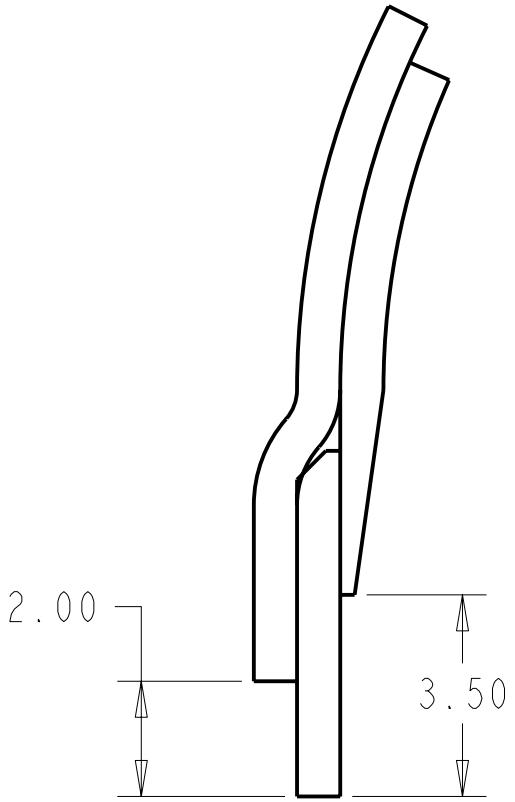

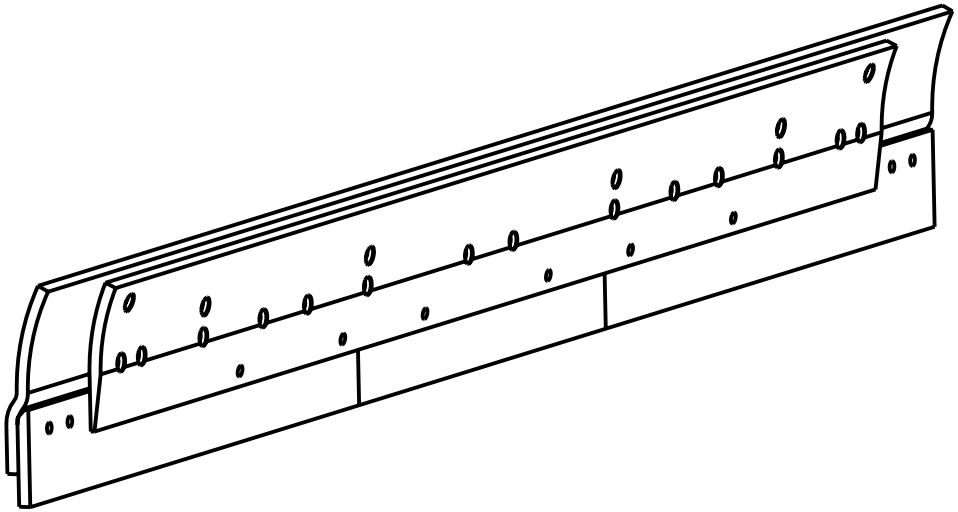

Quick Edge Assembly	
Part:	
All Dimensions in Inches	
University of Minnesota	
Michael Etheridge	10.03.05

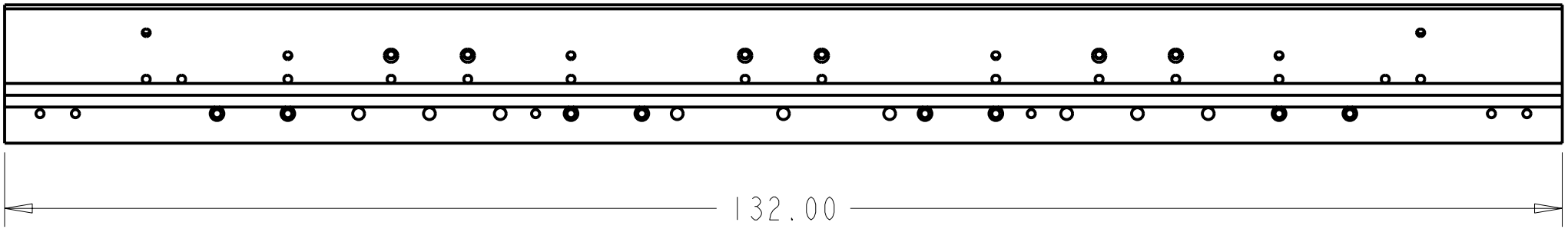

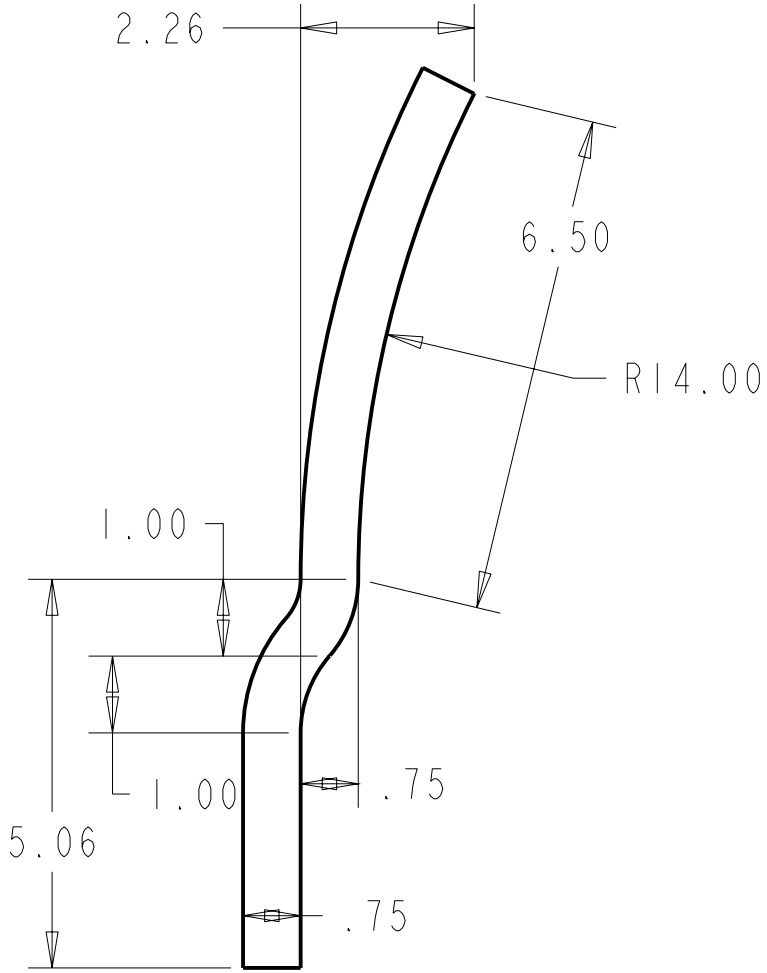

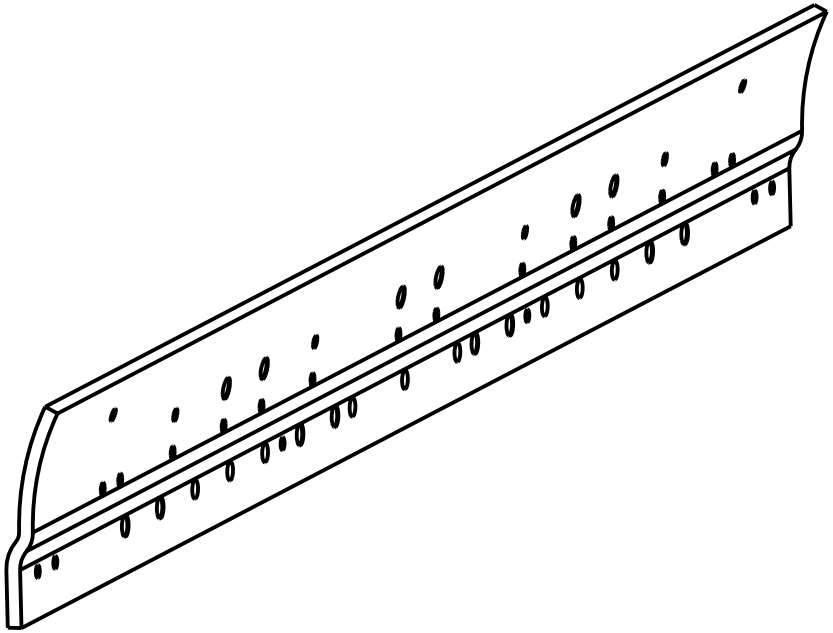

Quick Edge Assembly	
Part: Moldboard	A
All Dimensions in Inches	
University of Minnesota	
Michael Etheridge	10.03.05

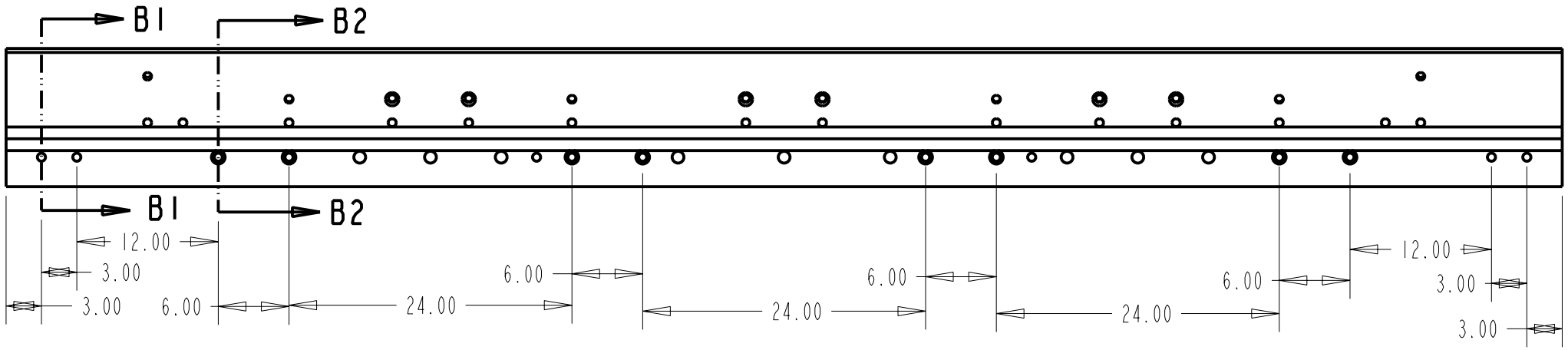

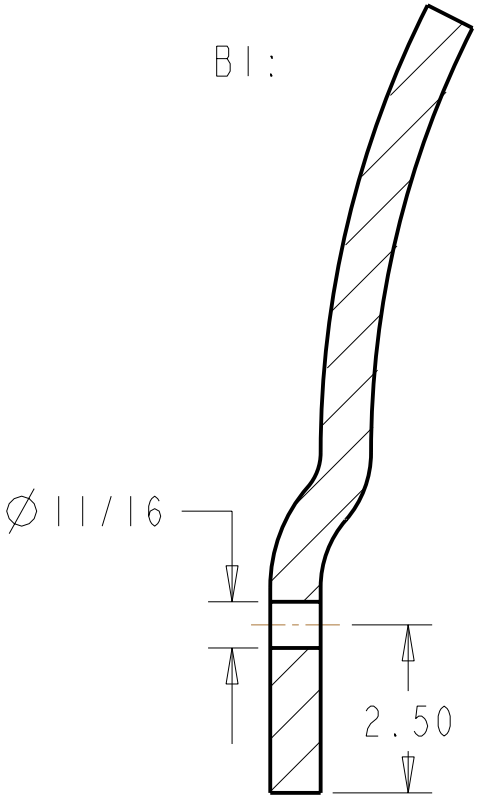

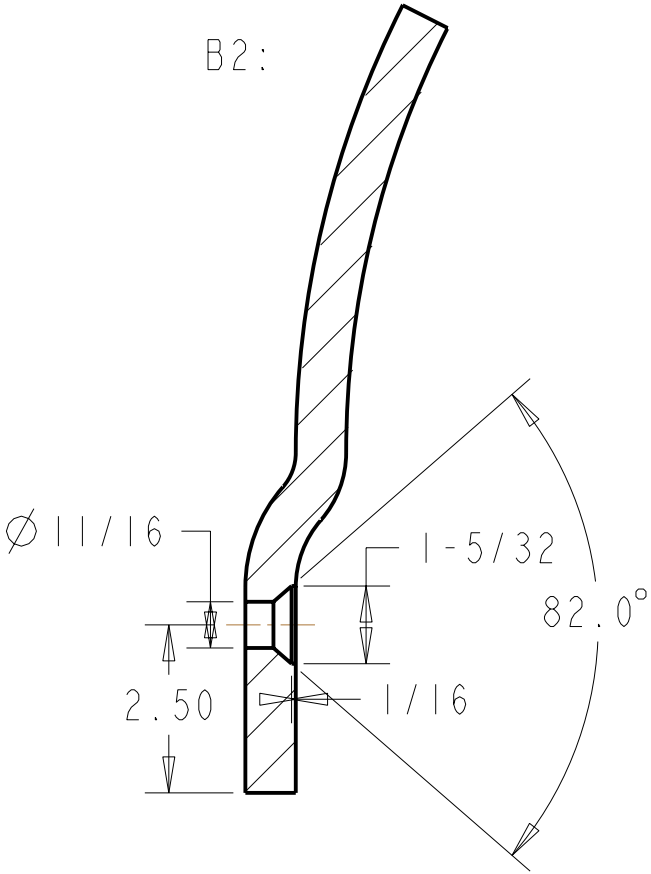

* Lower Bolting Holes

Quick Edge Assembly	
Part: Moldboard	B
All Dimensions in Inches	
University of Minnesota	
Michael Etheridge	10.03.05

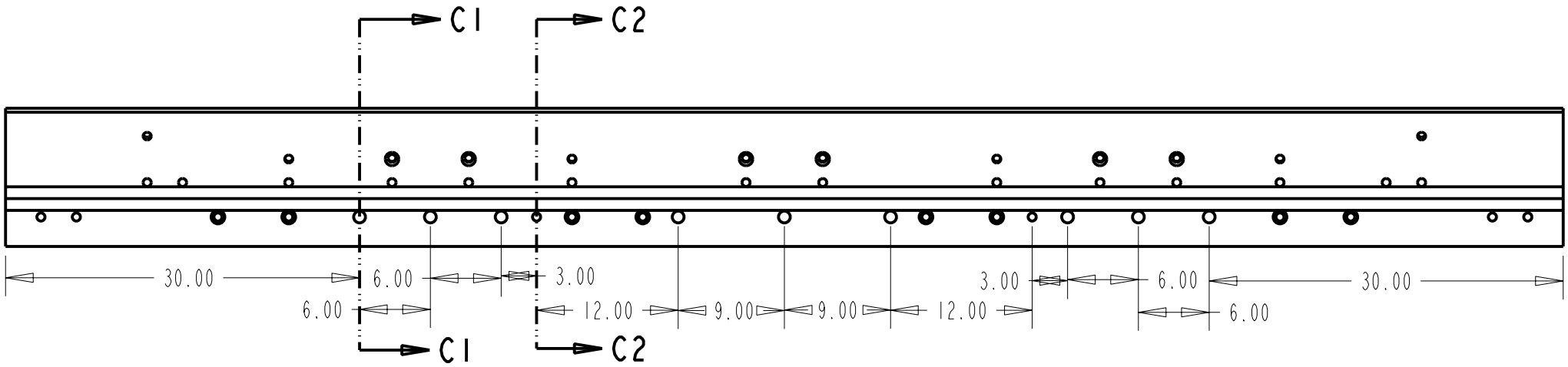

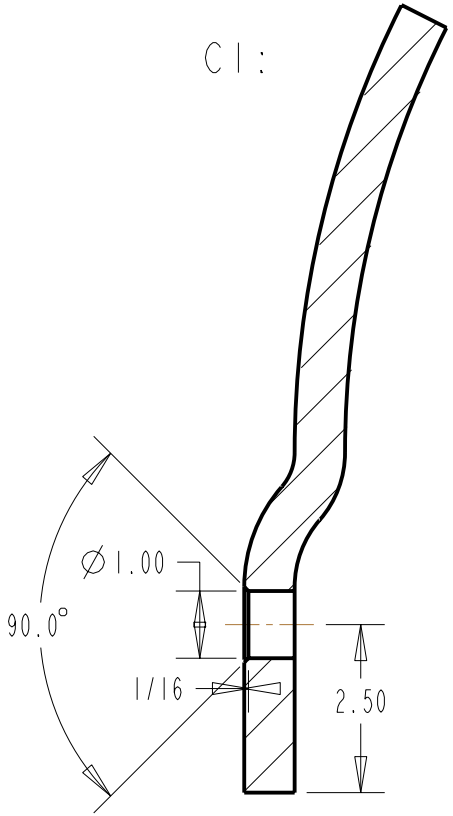

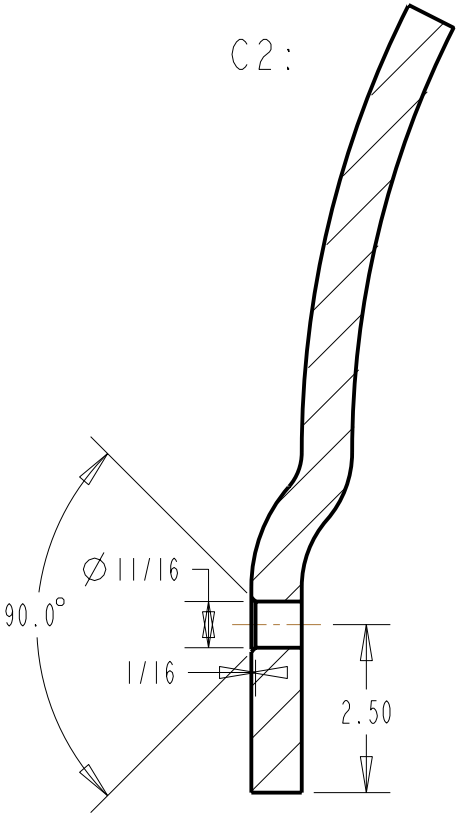

* Pin Holes

Quick Edge Assembly	
Part: Moldboard	C
All Dimensions in Inches	
University of Minnesota	
Michael Etheridge	10.03.05

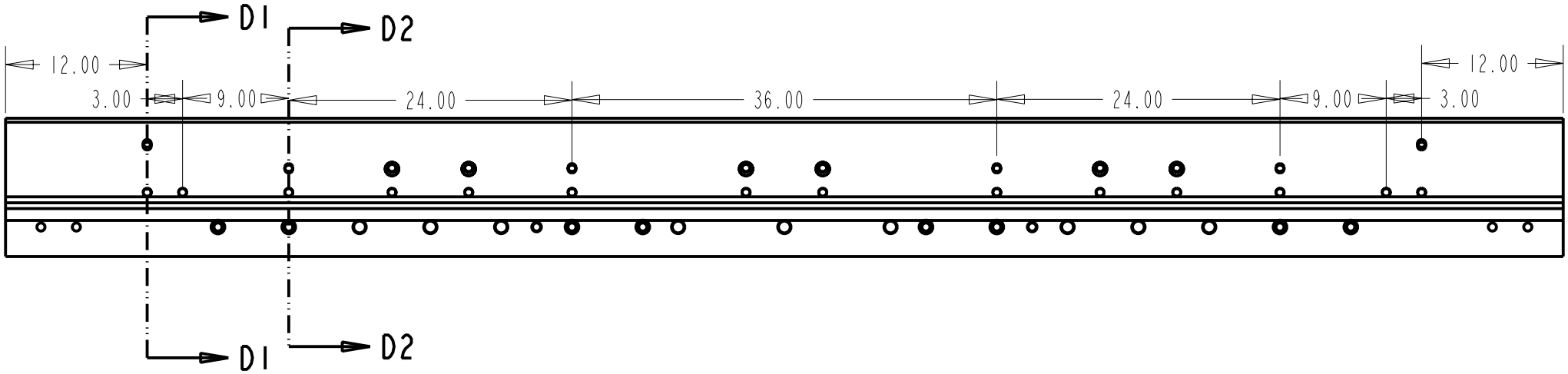

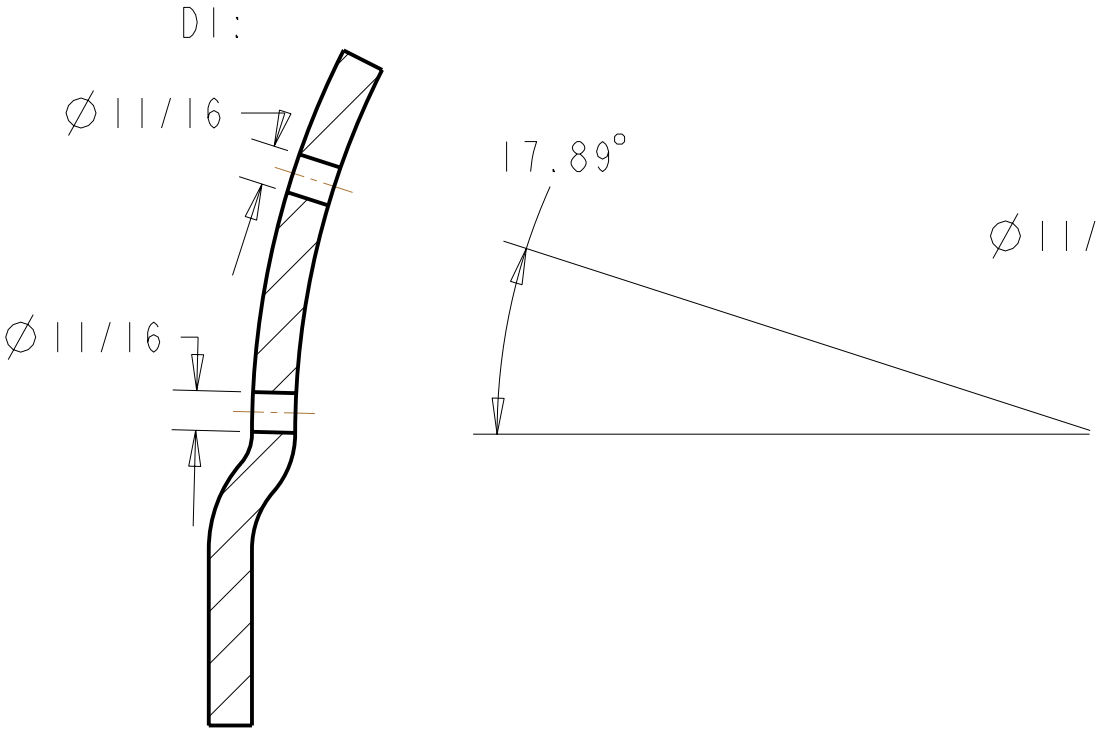

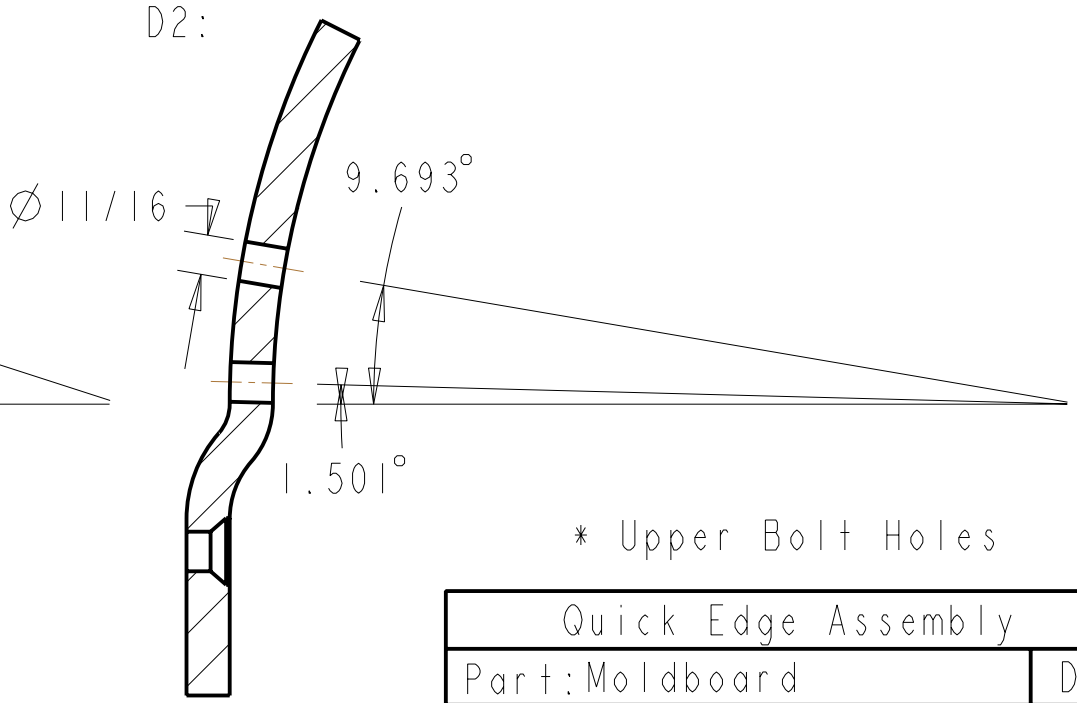

* Upper Bolt Holes

Quick Edge Assembly	
Part: Moldboard	D
All Dimensions in Inches	
University of Minnesota	
Michael Etheridge	10.03.05

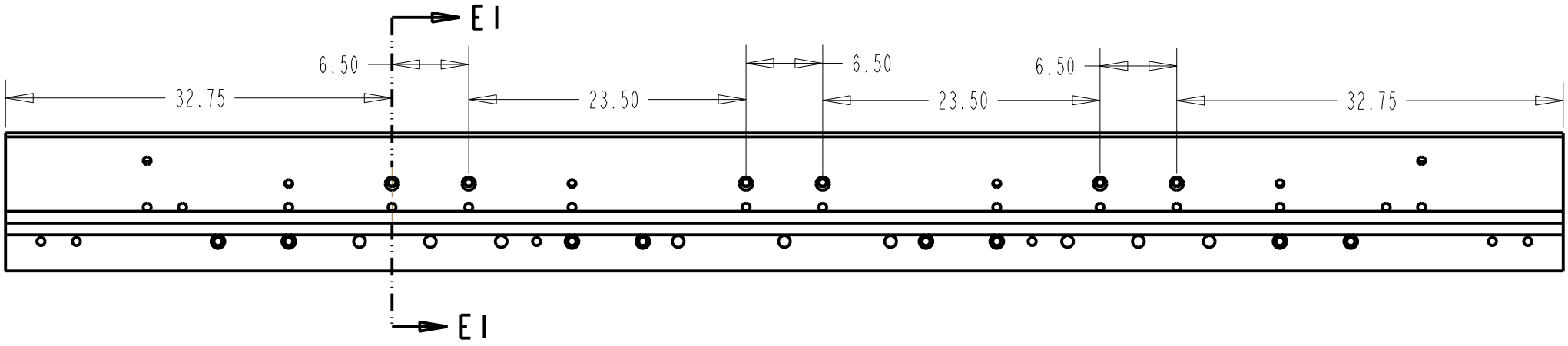

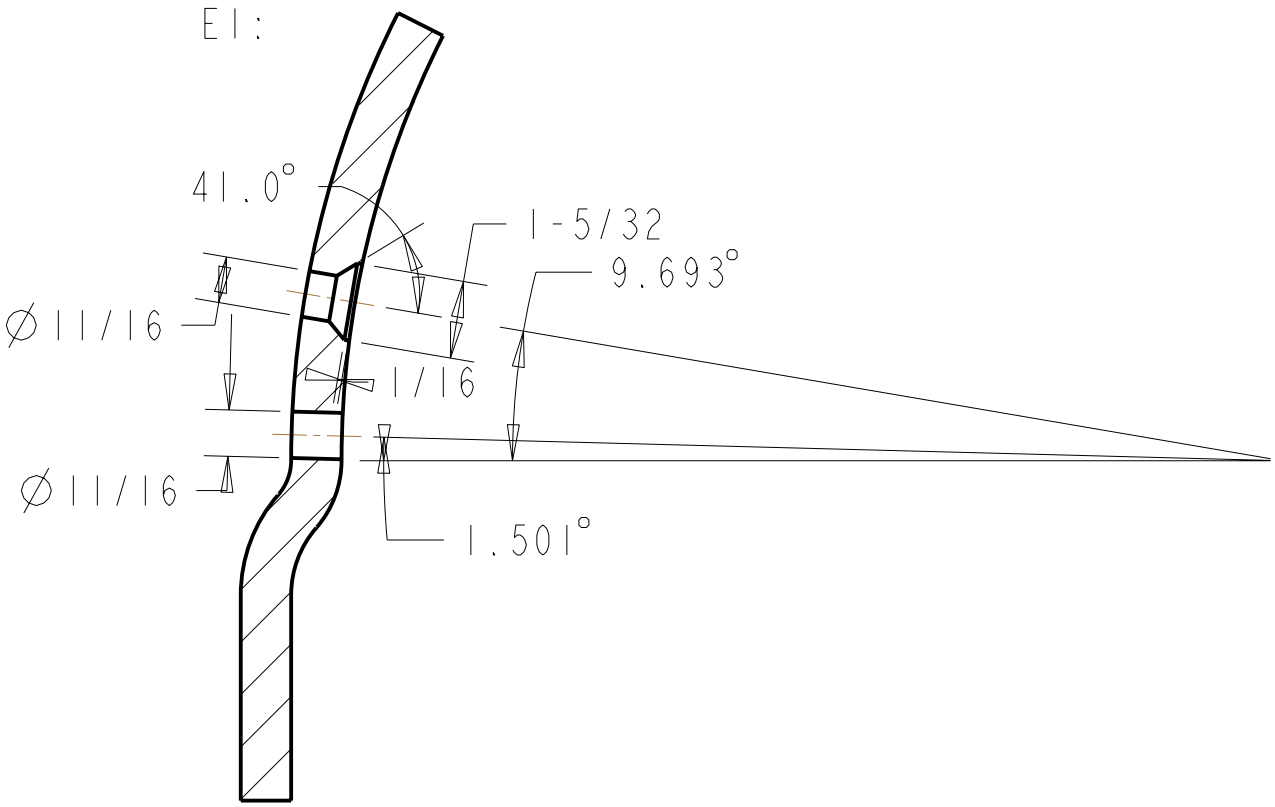

* Hydraulic Support Bolt Holes

Quick Edge Assembly	
Part: Moldboard	E
All Dimensions in Inches	
University of Minnesota	
Michael Etheridge	10.03.05

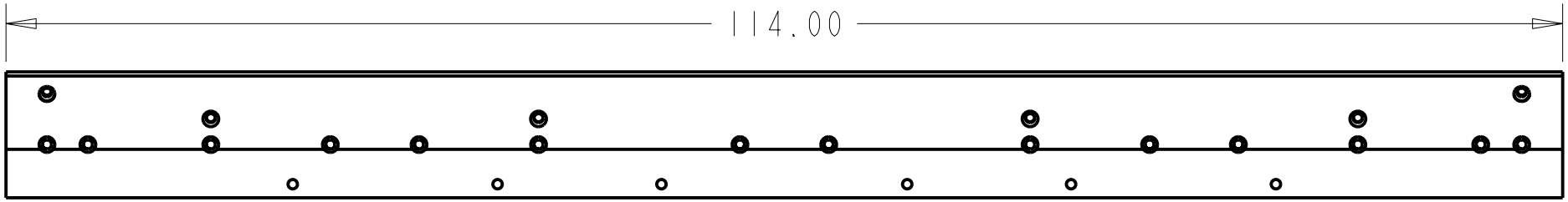

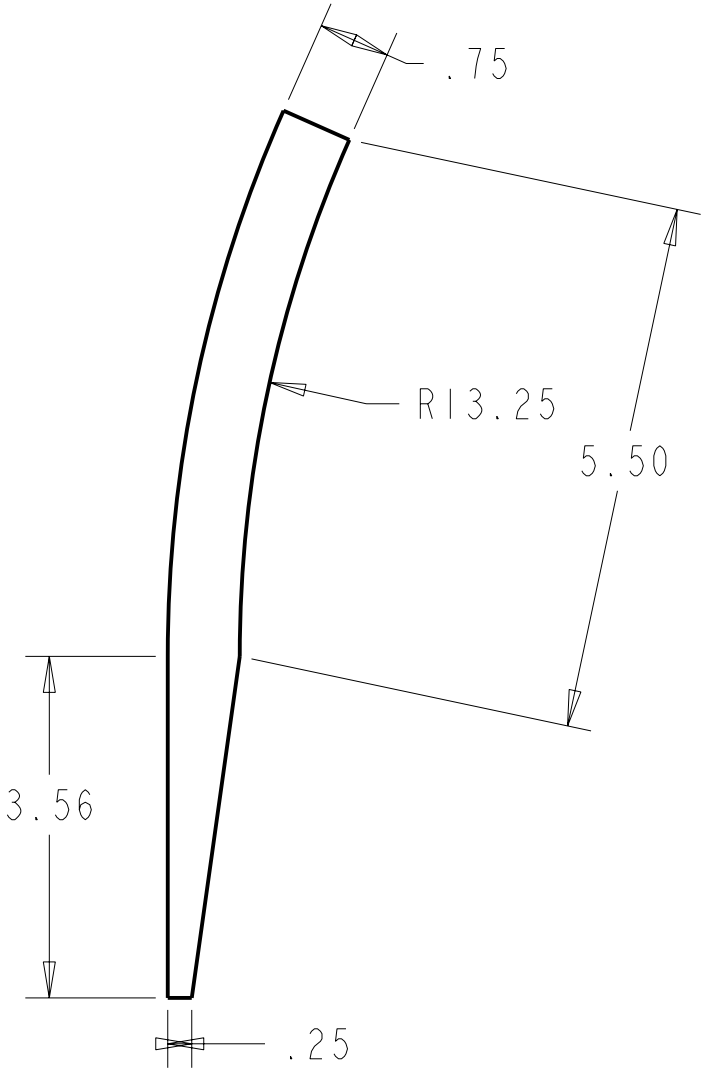

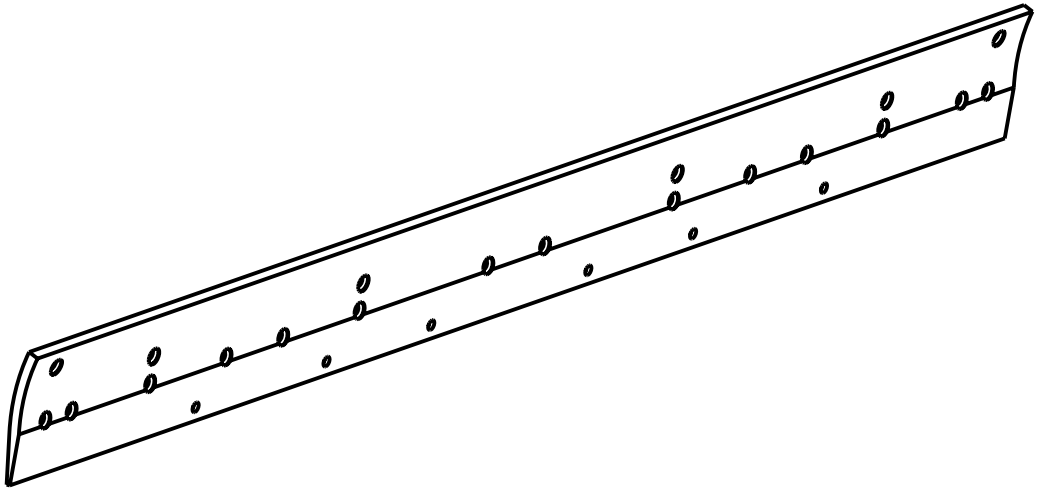

Quick Edge Assembly	
Part: Front Plate	A
All Dimensions in Inches	
University of Minnesota	
Michael Etheridge	10.03.05

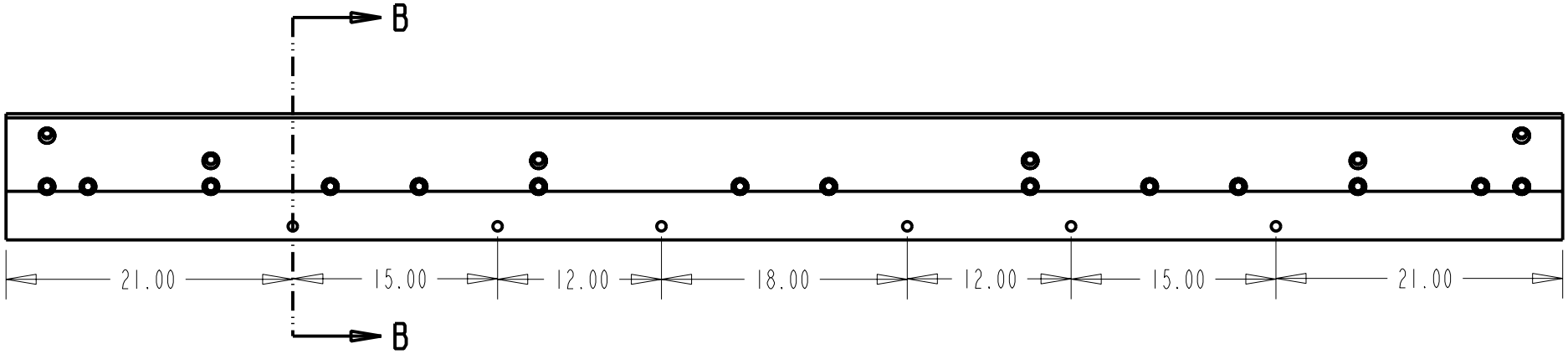

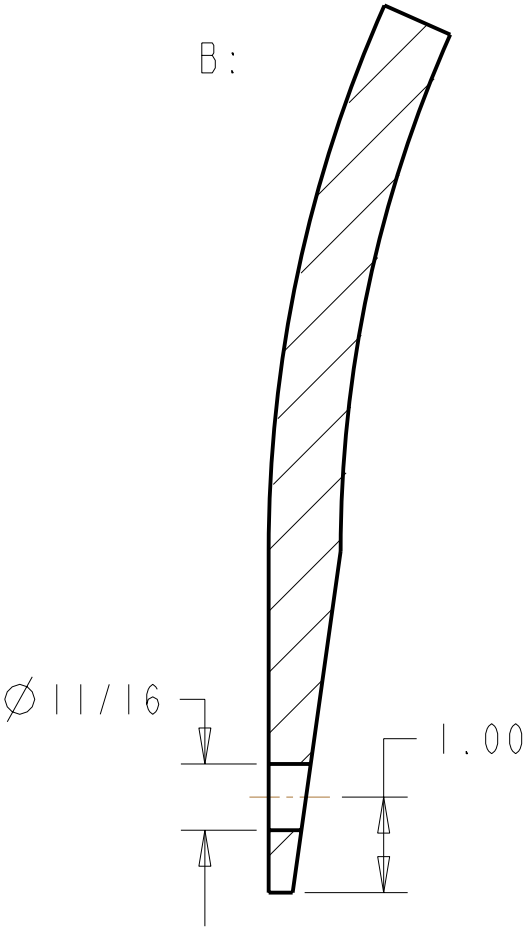

* Pin Holes

Quick Edge Assembly	
Part:Front Plate	B
All Dimensions in Inches	
University of Minnesota	
Michael Etheridge	10.03.05

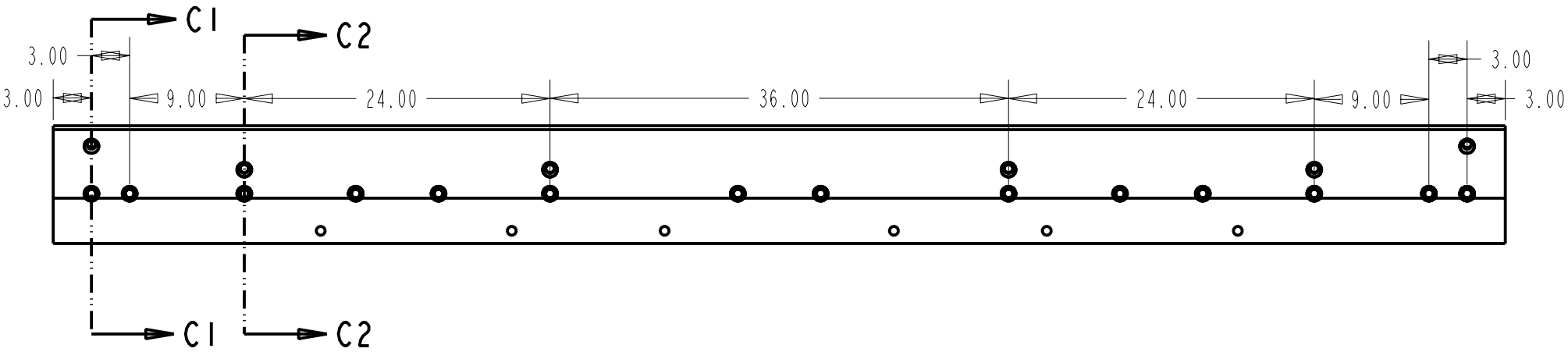

C1:

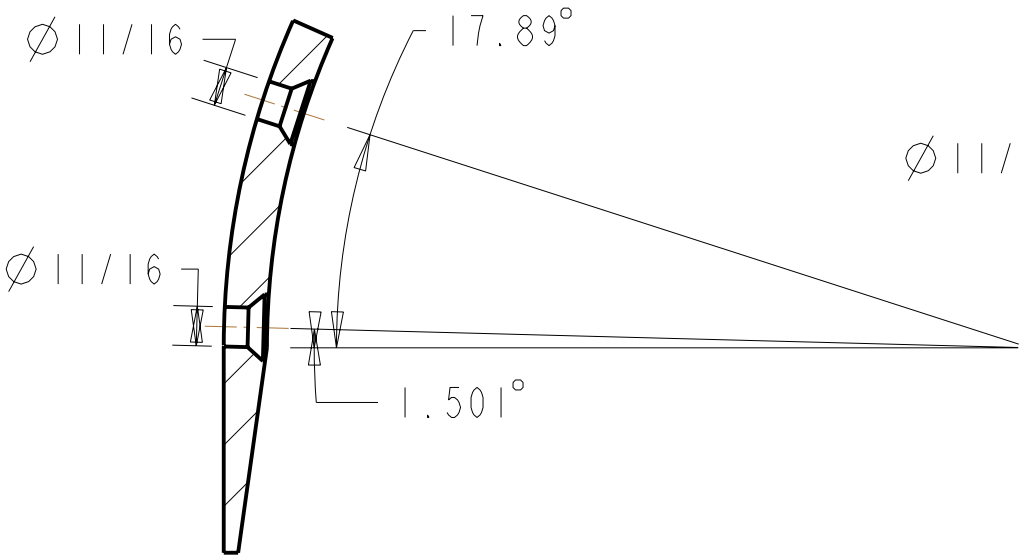

C2:

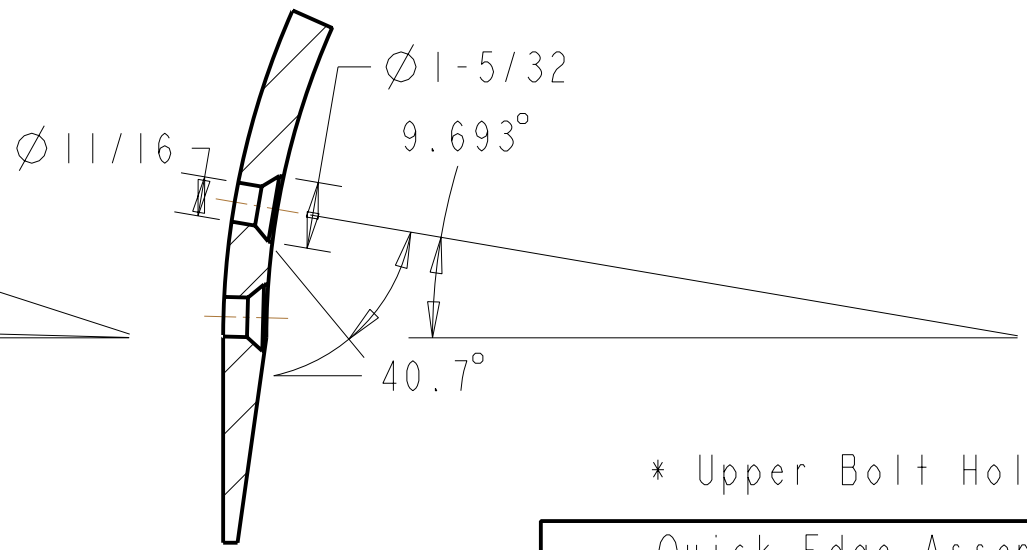

* Upper Bolt Holes

Quick Edge Assembly	
Part: Front Plate	C
All Dimensions in Inches	
University of Minnesota	
Michael Etheridge	10.03.05

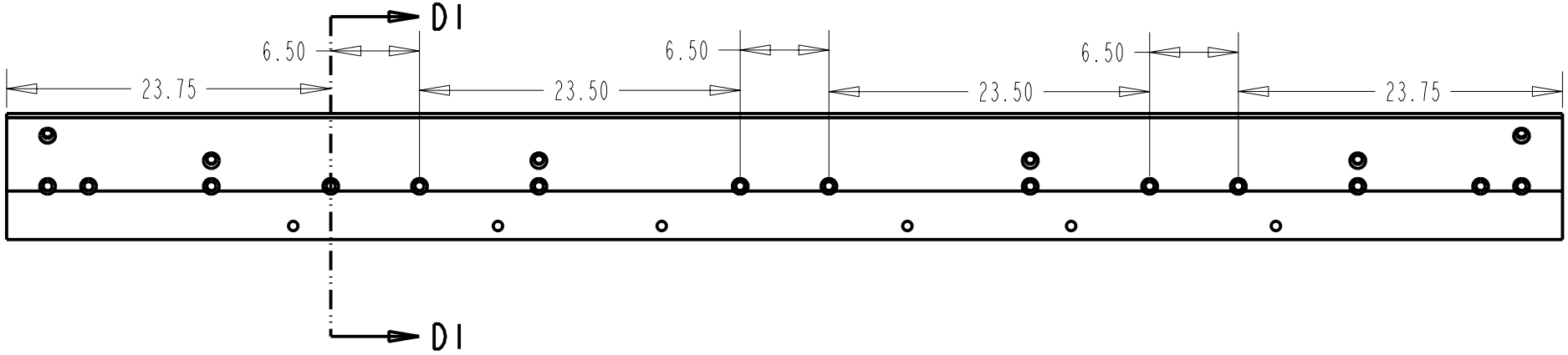

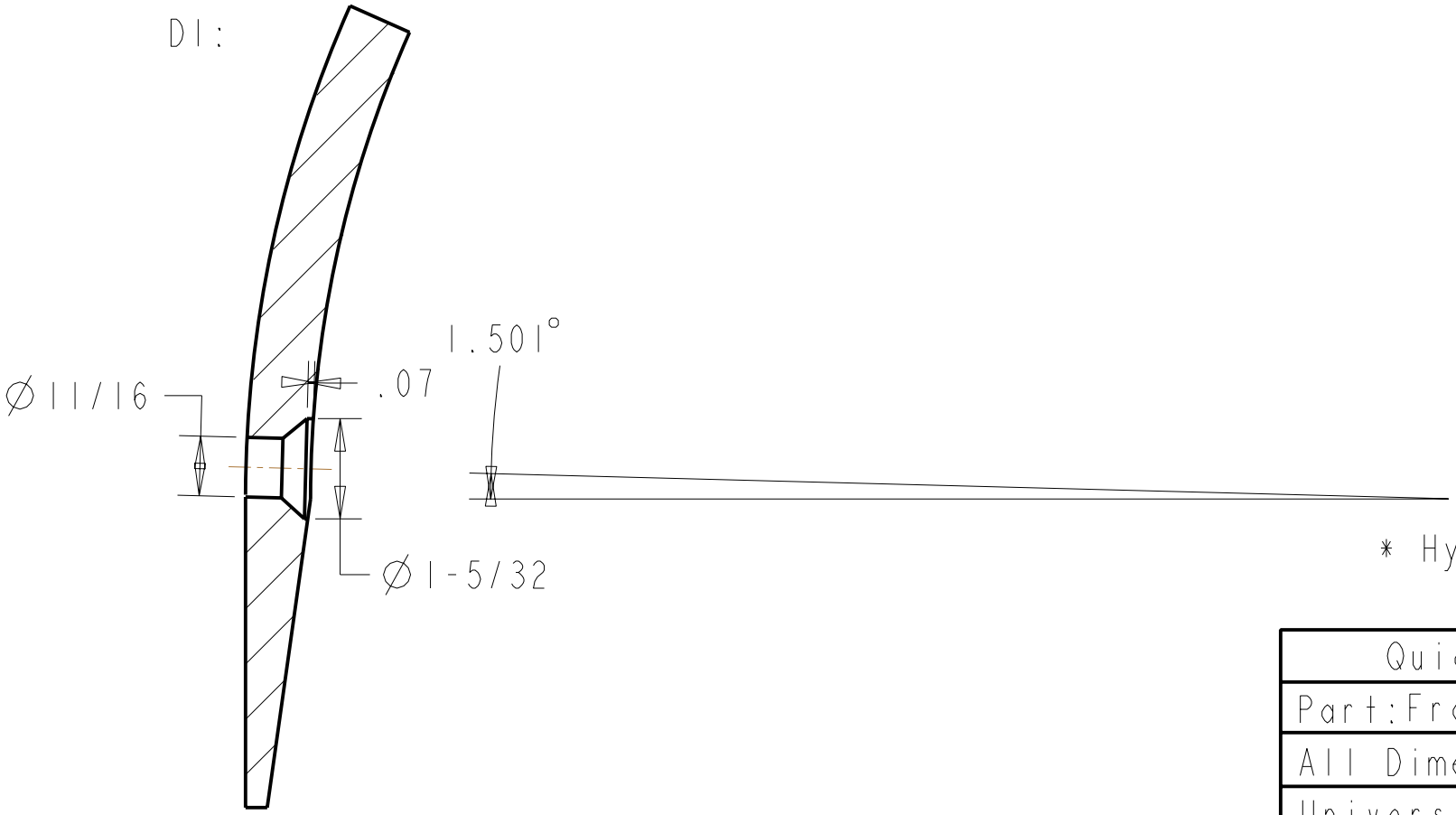

* Hydraulic Support Bolt Holes

Quick Edge Assembly	
Part:Front Plate	D
All Dimensions in Inches	
University of Minnesota	
Michael Etheridge	10.03.05

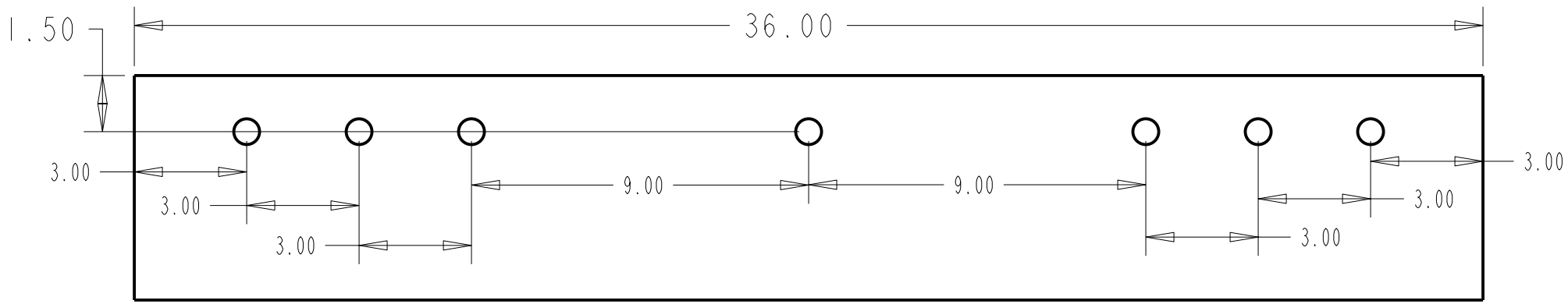

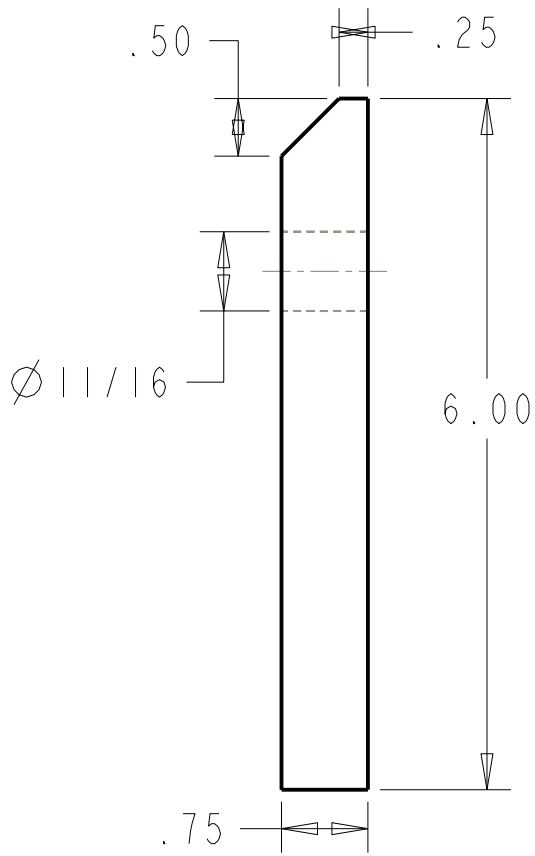

Quick Edge Assembly	
Part:Cutting Edge 36"	
All Dimensions in Inches	
University of Minnesota	
Michael Etheridge	10.03.05

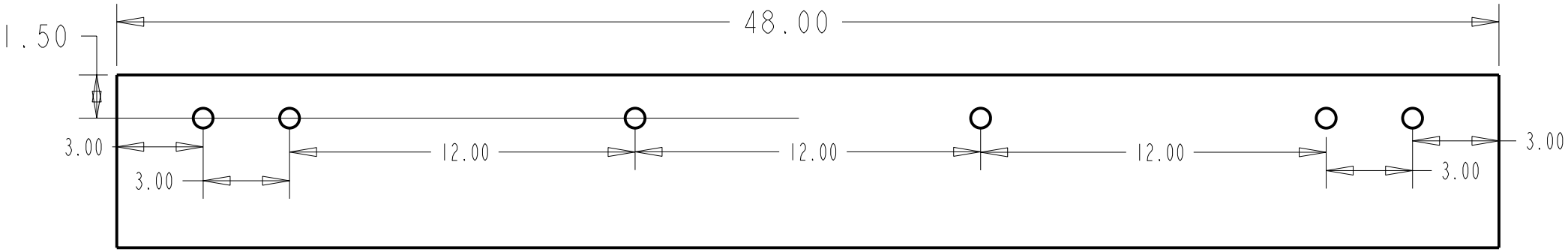

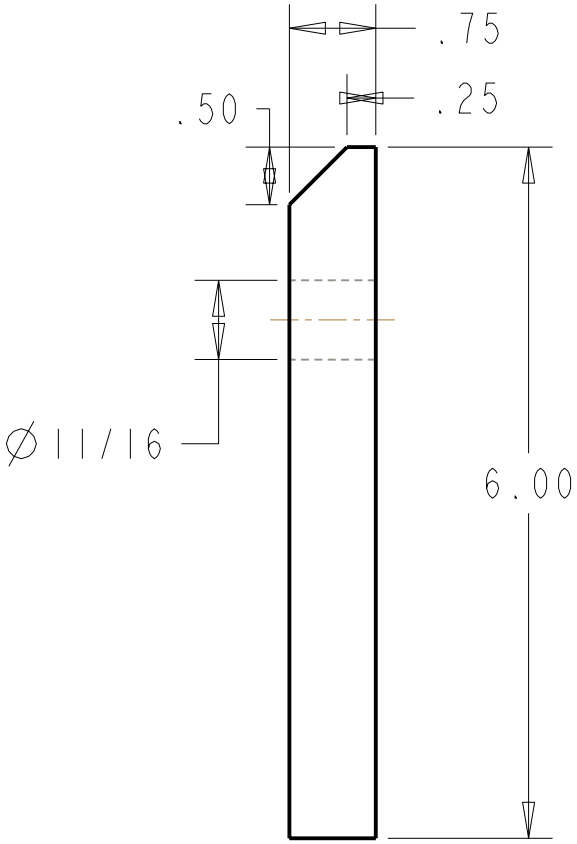

Quick Edge Assembly	
Part: Cutting Edge 48"	
All Dimensions in Inches	
University of Minnesota	
Michael Etheridge	10.03.05

Inner Pin Plate:

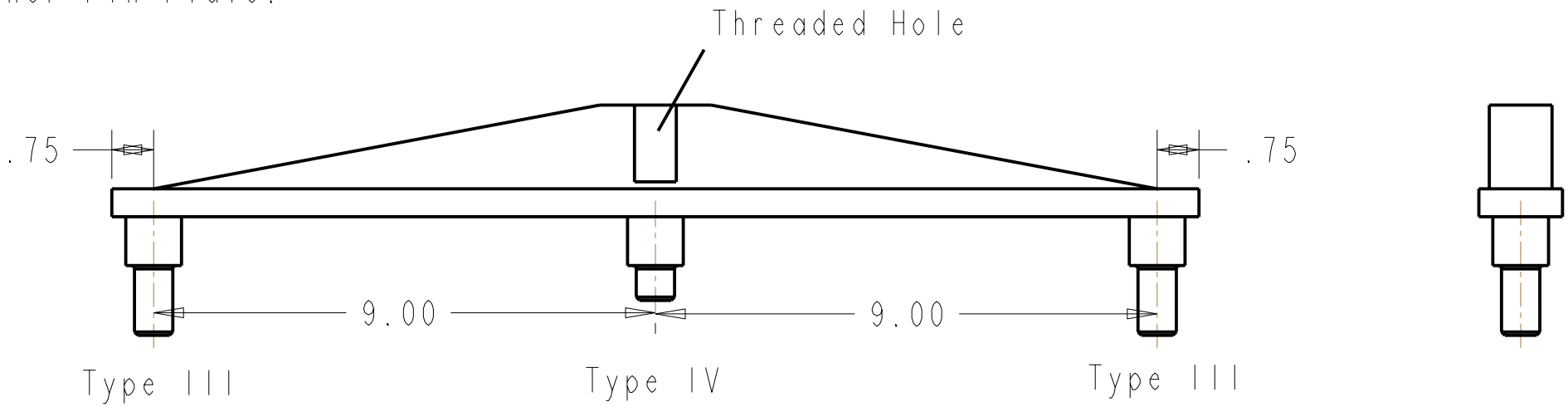

Outer Pin Plate:

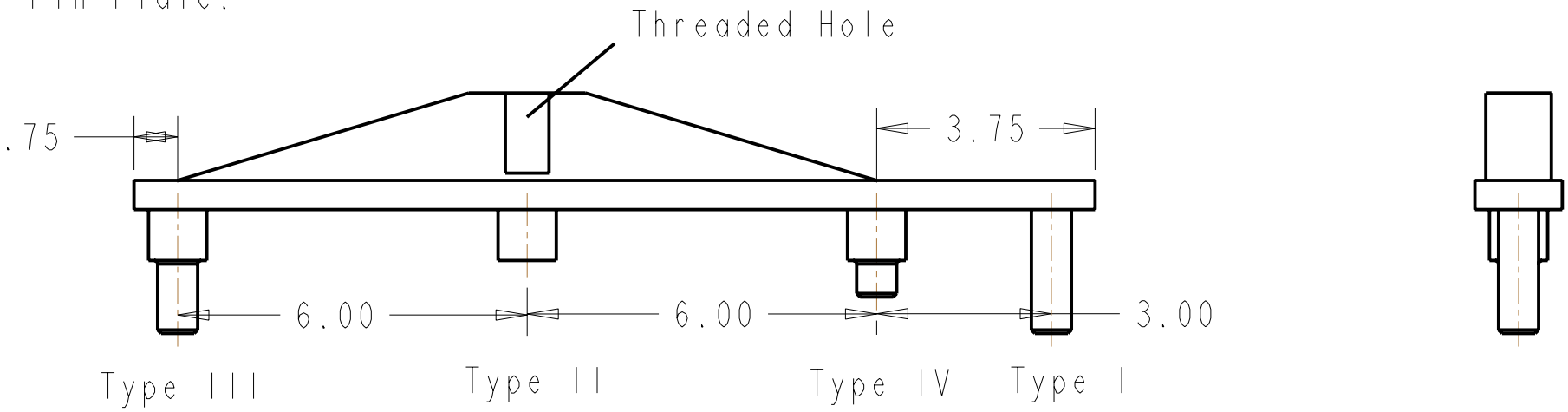

Quick Edge Assembly	
Part: Pin Plate	A
All Dimensions in Inches	
University of Minnesota	
Michael Etheridge	10.03.05

Inner Pin Plate:

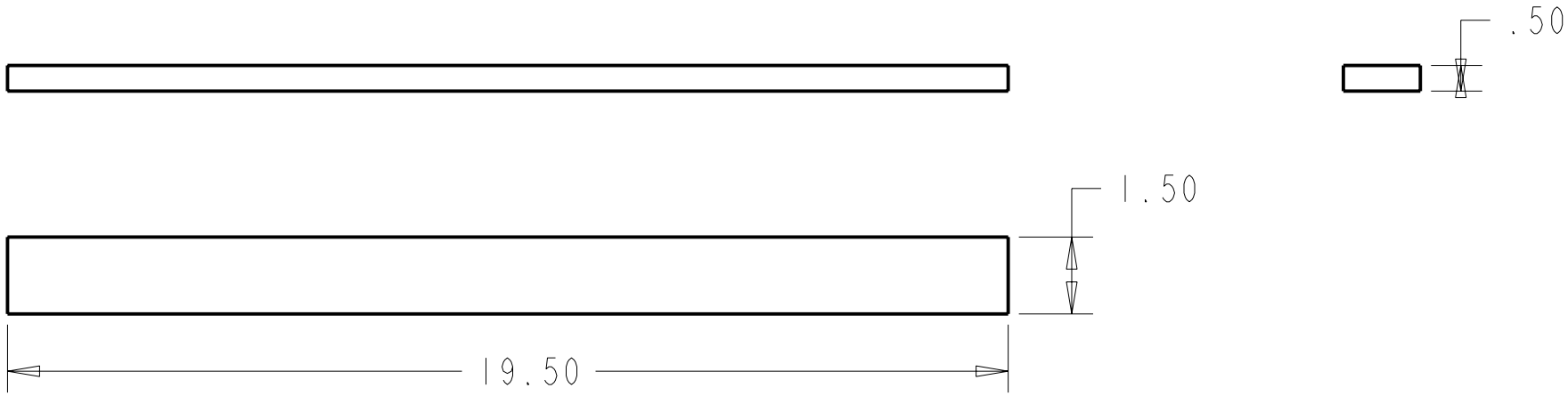

Outer Pin Plate:

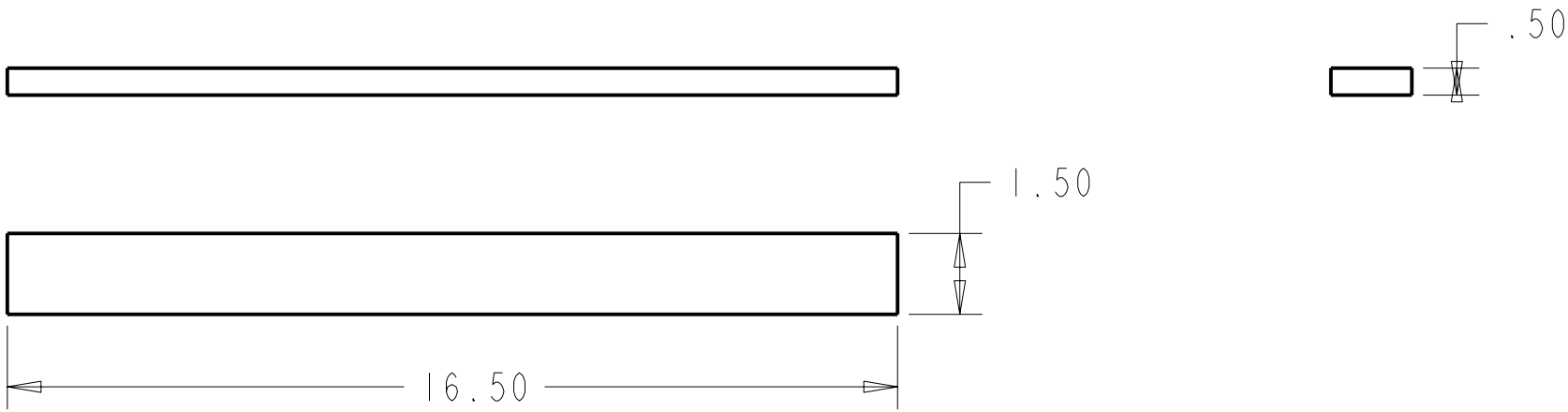

Quick Edge Assembly	
Part: Pin Plate	B
All Dimensions in Inches	
University of Minnesota	
Michael Etheridge	10.03.05

Inner Support:

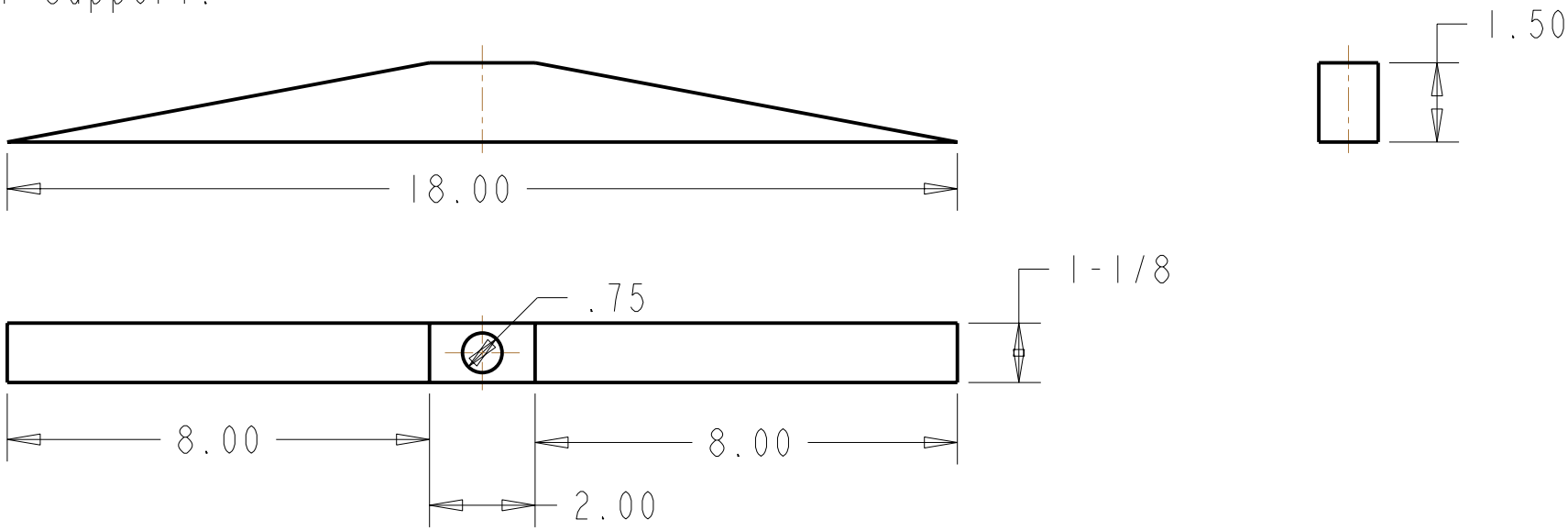

Outer Support:

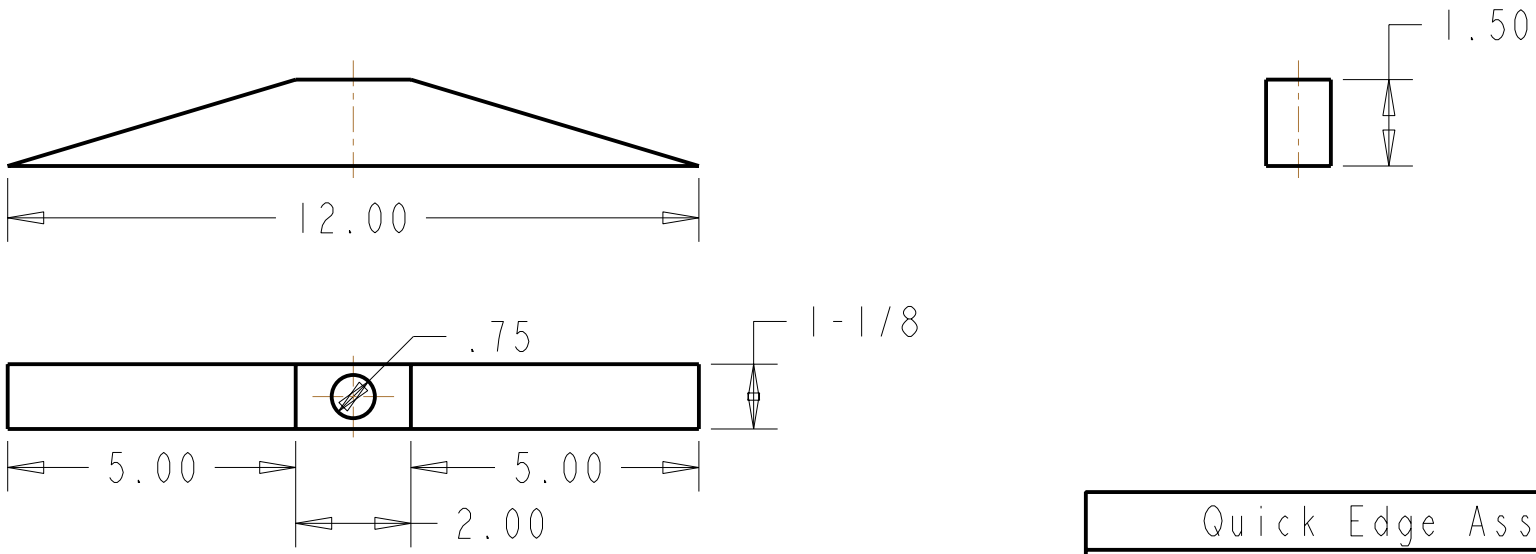

Quick Edge Assembly	
Part: Pin Plate	C
All Dimensions in Inches	
University of Minnesota	
Michael Etheridge	10.03.05

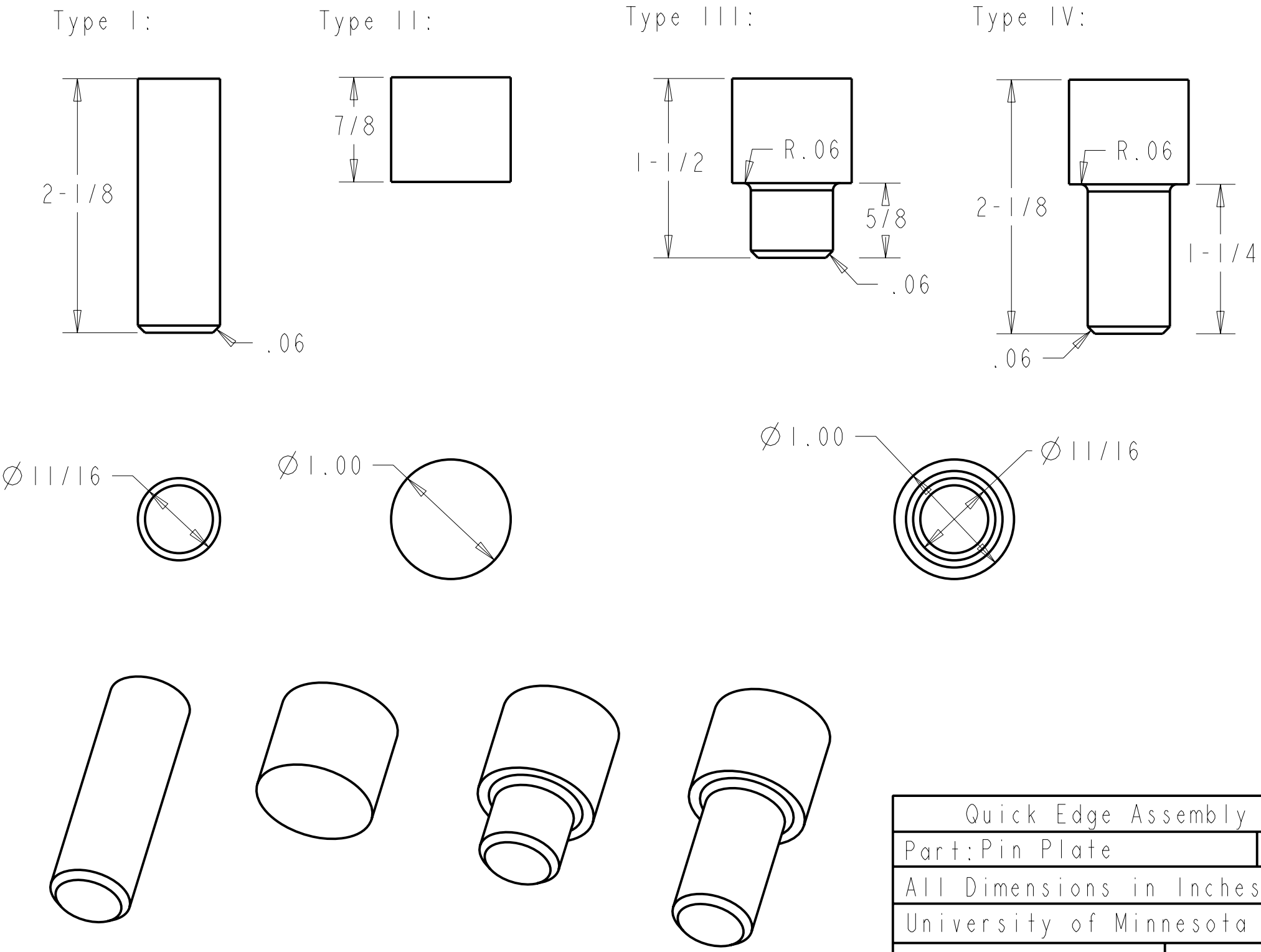

Quick Edge Assembly	
Part: Pin Plate	D
All Dimensions in Inches	
University of Minnesota	
Michael Etheridge	10.03.05

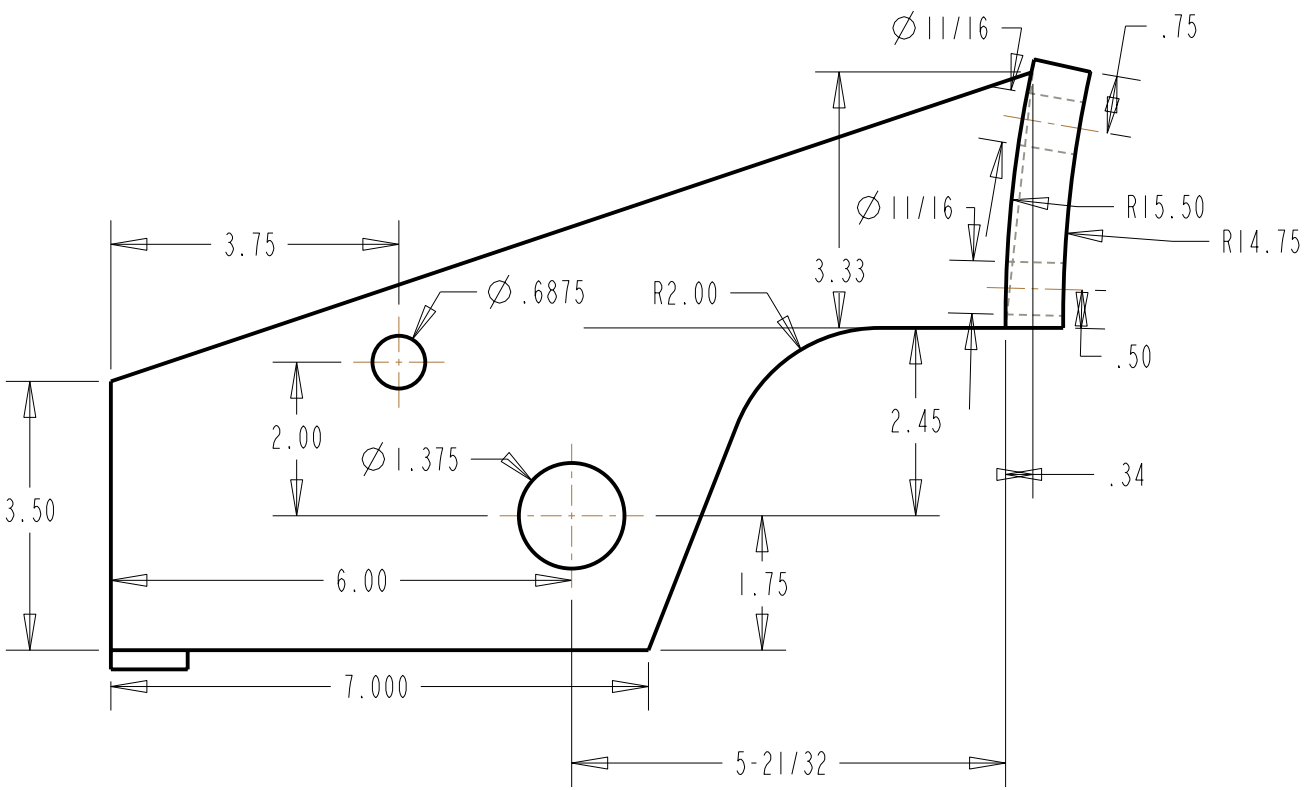

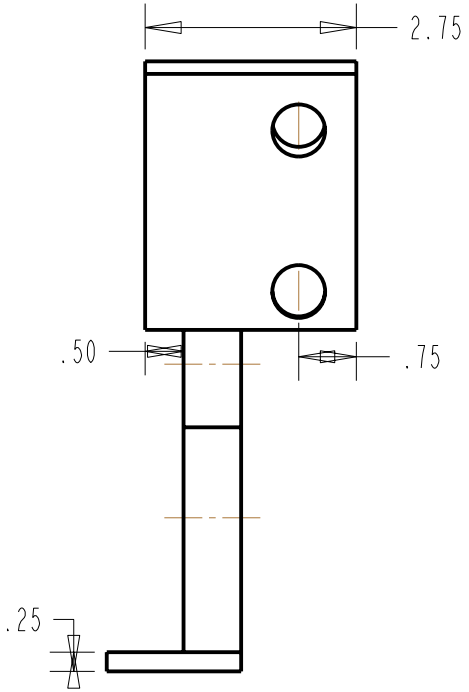

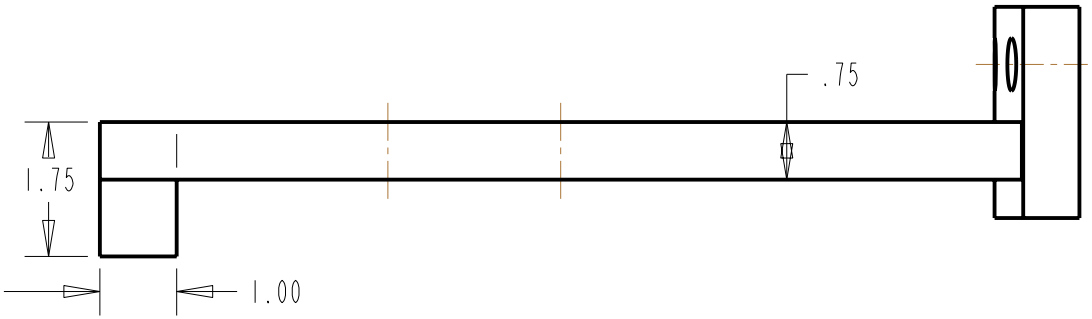

Quick Edge Assembly	
Part: Hyd Support- Left	A
All Dimensions in Inches	
University of Minnesota	
Michael Etheridge	10.03.05

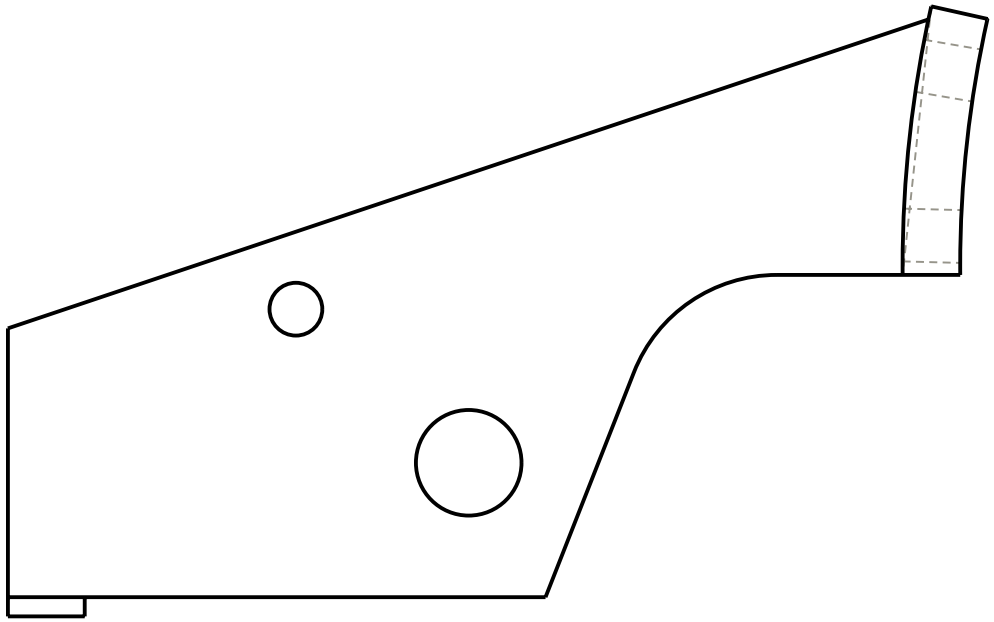

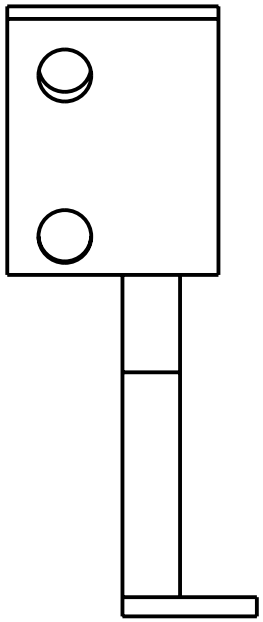

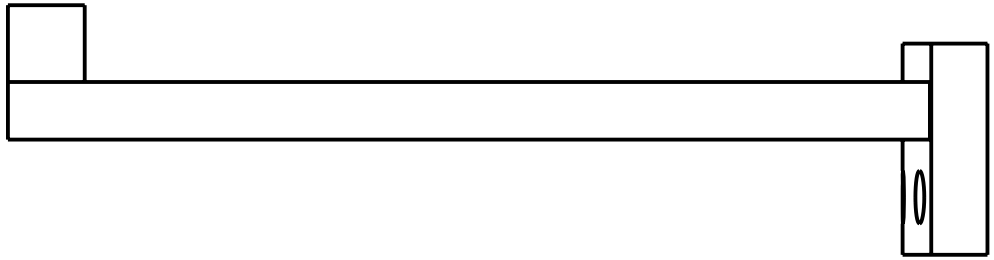

* Same Dimensioning
as Left Support

Quick Edge Assembly	
Part: Hyd Support Right	B
All Dimensions in Inches	
University of Minnesota	
Michael Etheridge	10.03.05

Appendix C

Moldboard Strength Investigation EES Code

/ Moldboard Strength Analysis
/ Author: Michael Etheridge
/ Last Revision: September 26, 2005
/
/ Objective:
/ This program is intended to analyze the levels of stress present in the moldboard component
/ of the Quick Edge Design. Better understanding of the variables and equations included in this
/ program can be obtained by reading Section 5.1.2 of this report.
/
/ KEY VARIABLES --> See Section 5.1.2

Variable Initialization- See Analysis Write-up for Graphical Definition of Variables

$F_c = 24000$ [lbf] Force of All Cylinders

$L = 11$ [ft] $\cdot$ 12 [in/ft] Total Length of Moldboard

$x_{ce} = 6$ [in] Height of Cutting Edges

$y_0 = 0.75$ [in] Thickness of Moldboard

$x_f = 2.5$ [in] Front Plate Contact Length with Cutting Edges

$x_b = 3.5$ [in] Moldboard Contact Length With Cutting Edges

$x_p = 1.5$ [in] Distance from Top of Cutting Edge to Pin Holes

$x_t = 0.5$ [in] Tapered Length at Top of Cutting Edges

$x_s = 2$ [in] Contact Length for Support on Back of Moldboard

$x_{bf} = 2.07$ [in] Free Length on Moldboard

Force Relations for Float Loading

$LowHorF_M = 10370$ [lbf] Mean X Force

$LowHorF_A = 3761$ [lbf] Alternating X Force

$LowHorF_{HIGH} = LowHorF_M + LowHorF_A$

$$F_c + \rho_{bLowM} \cdot x_b = LowHorF_M + \rho_{fLowM} \cdot x_f$$

$$-\rho_{fLowM} \cdot x_f \cdot [0.5 \cdot x_f - x_p] + 2/7 \cdot [x_{ce} - x_p] \cdot LowHorF_M + \rho_{bLowM} \cdot x_b \cdot [0.5 \cdot x_b + x_t - x_p] - LowHorF_M \cdot [x_{ce} - x_p] = 0$$

$$F_c + \rho_{bLowHIGH} \cdot x_b = LowHorF_{HIGH} + \rho_{fLowHIGH} \cdot x_f$$

$$-\rho_{fLowHIGH} \cdot x_f \cdot [0.5 \cdot x_f - x_p] + 2/7 \cdot [x_{ce} - x_p] \cdot LowHorF_{HIGH} + \rho_{bLowHIGH} \cdot x_b \cdot [0.5 \cdot x_b + x_t - x_p] - LowHorF_{HIGH} \cdot [x_{ce} - x_p] = 0$$

$\rho_{bLowA} = \rho_{bLowHIGH} - \rho_{bLowM}$

,,

$$\rho_{sLowM} = 1.7 \cdot \frac{LowHorF_M}{x_s}$$

$$\rho_{sLowA} = 1.7 \cdot \frac{LowHorF_A}{x_s}$$

$$\rho_{sLowHIGH} = 1.7 \cdot \left[\frac{LowHorF_M + LowHorF_A}{x_s} \right]$$

Force Relations for Full-Down Loading

$HighHorF_m = 18200$ [lbf] Mean X Force

$HighHorF_a = 5243$ [lbf] Alternating X Force

$HighHorF_{HIGH} = HighHorF_m + HighHorF_a$

$F_c + \rho_{bHighM} \cdot x_b = HighHorF_m + \rho_{fHighM} \cdot x_f$

$$- \rho_{fHighM} \cdot x_f \cdot [0.5 \cdot x_f - x_p] + 2 / 7 \cdot [x_{ce} - x_p] \cdot HighHorF_m + \rho_{bHighM} \cdot x_b \cdot [0.5 \cdot x_b + x_t - x_p] - HighHorF_m \cdot [x_{ce} - x_p] = 0$$

$F_c + \rho_{bHighHIGH} \cdot x_b = HighHorF_{HIGH} + \rho_{fHighHIGH} \cdot x_f$

$$- \rho_{fHighHIGH} \cdot x_f \cdot [0.5 \cdot x_f - x_p] + 2 / 7 \cdot [x_{ce} - x_p] \cdot HighHorF_{HIGH} + \rho_{bHighHIGH} \cdot x_b \cdot [0.5 \cdot x_b + x_t - x_p] - HighHorF_{HIGH} \cdot [x_{ce} - x_p] = 0$$

$\rho_{bHighA} = \rho_{bHighHIGH} - \rho_{bHighM}$

$\rho_{bMAX} = \rho_{bHighHIGH}$

,,

$$\rho_{sHighM} = 1.7 \cdot \frac{HighHorF_m}{x_s}$$

$$\rho_{sHighA} = 1.7 \cdot \frac{HighHorF_a}{x_s}$$

$$\rho_{sMAX} = 1.7 \cdot \left[\frac{HighHorF_m + HighHorF_a}{x_s} \right]$$

Finding the Maximum Deflection for Full-Down Loading

$E = 3 \times 10^7$ [psi] Modulus of Elasticity for Steel

$I_b = L \cdot \frac{y_0^3}{12}$ Moment of Inertia of Moldboard

$V_{bMAX} = \rho_{bMAX} \cdot x_b - \rho_{sMAX} \cdot x_s$

$M_{bMAX} = \rho_{bMAX} \cdot x_b \cdot [x_{bf} + 0.5 \cdot x_b] - \rho_{sMAX} \cdot x_s \cdot [x_p + x_{bf} - x_t]$

$M_2 = M_{bMAX} - V_{bMAX} \cdot y + 0.5 \cdot [y - x_{bf}]^2 \cdot [\rho_{bMAX} - \rho_{sMAX}]$

$M_3 = M_{bMAX} - V_{bMAX} \cdot z - \rho_{sMAX} \cdot x_s \cdot [z - x_{bf} - 0.5 \cdot x_s] + 0.5 \cdot \rho_{bMAX} \cdot [z - x_{bf}]^2$

$dM2df = x_b + x_{bf} - y$

$dM3df = x_b + x_{bf} - z$

$\delta_1 = \frac{1}{E \cdot I_b} \cdot [1/3 \cdot V_{bMAX} \cdot x_{bf}^3 - 1/2 \cdot (V_{bMAX} \cdot [x_b + x_{bf}] + M_{bMAX}) \cdot x_{bf}^2 + M_{bMAX} \cdot (x_b + x_{bf}) \cdot x_{bf}]$

$\delta_b = \delta_1 + \frac{1}{E \cdot I_b} \cdot \left[\int_{x_{bf}}^{x_{bf} + x_s} (dM2df \cdot M_2)\, dy + \int_{x_{bf} + x_s}^{x_{bf} + x_b} (dM3df \cdot M_3)\, dz \right]$

Solving for Fatigue Safety Factors

$S_{ut} = 92500$ [psi] Ultimate Strength for 1045 HR Steel

$S_y = 60000$ [psi] Yield Strength for 1045 HR Steel

$K_t = 2.27$ Stress Concentration Factor at Bolt Hole [15, p.150]

$C_{size} = 0.9$ Fatigue Size Factor for c < 2.5 cm

$C_{rel} = 0.814$ Fatigue 99% Reliability Factor [15, p.316]

$C_{surf} = 0.79$ Fatigue Machined Surface Factor [15, p.314]

$S_n = C_{size} \cdot C_{rel} \cdot C_{surf} \cdot 0.5 \cdot S_{ut}$ Adjusted Endurance Limit Calculation

Case 1: During Standard Plow Run (Float)

$M_{FloatM} = \rho_{bLowM} \cdot x_b \cdot [x_{bf} + 0.5 \cdot x_b] - \rho_{sLowM} \cdot x_s \cdot [x_p + x_{bf} - x_t]$

$M_{FloatA} = \rho_{bLowA} \cdot x_b \cdot [x_{bf} + 0.5 \cdot x_b] - \rho_{sLowA} \cdot x_s \cdot [x_p + x_{bf} - x_t]$

$\sigma_{FloatM} = K_t \cdot 6 \cdot \frac{M_{FloatM}}{L \cdot y_0^2}$

$\sigma_{FloatA} = K_t \cdot 6 \cdot \frac{M_{FloatA}}{L \cdot y_0^2}$

$$n_1 = \frac{1}{\frac{\sigma_{FloatA}}{S_n} + \frac{\sigma_{FloatM}}{S_{ut}}}$$ Fatigue Safety Factor for Case 1

Case 2: Cycling Between Stowed to Float Pressure

$$\rho_{bFloatMid} = \frac{\rho_{bLowHIGH}}{2}$$

$$\rho_{sFloatMid} = \frac{\rho_{sLowHIGH}}{2}$$

$$\rho_{bFloatAlt} = \frac{\rho_{bLowHIGH}}{2}$$

$$\rho_{sFloatAlt} = \frac{\rho_{sLowHIGH}}{2}$$

$$M_{FloatMid} = \rho_{bFloatMid} \cdot x_b \cdot \left[x_{bf} + 0.5 \cdot x_b\right] - \rho_{sFloatMid} \cdot x_s \cdot \left[x_p + x_{bf} - x_t\right]$$

$$M_{FloatAlt} = \rho_{bFloatAlt} \cdot x_b \cdot \left[x_{bf} + 0.5 \cdot x_b\right] - \rho_{sFloatAlt} \cdot x_s \cdot \left[x_p + x_{bf} - x_t\right]$$

$$\sigma_{FloatMid} = K_t \cdot 6 \cdot \frac{M_{FloatMid}}{L \cdot y_0^{\,2}}$$

$$\sigma_{FloatAlt} = K_t \cdot 6 \cdot \frac{M_{FloatAlt}}{L \cdot y_0^{\,2}}$$

$$n_2 = \frac{1}{\frac{\sigma_{FloatAlt}}{S_n} + \frac{\sigma_{FloatMid}}{S_{ut}}}$$ Fatigue Safety Factor for Case 2

Case3: High Download Plow Run (Full-Down Pressure)

$$M_{FullM} = \rho_{bHighM} \cdot x_b \cdot \left[x_{bf} + 0.5 \cdot x_b\right] - \rho_{sHighM} \cdot x_s \cdot \left[x_p + x_{bf} - x_t\right]$$

$$M_{FullA} = \rho_{bHighA} \cdot x_b \cdot \left[x_{bf} + 0.5 \cdot x_b\right] - \rho_{sHighA} \cdot x_s \cdot \left[x_p + x_{bf} - x_t\right]$$

$$\sigma_{FullM} = K_t \cdot 6 \cdot \frac{M_{FullM}}{L \cdot y_0^{\,2}}$$

$$\sigma_{FullA} = K_t \cdot 6 \cdot \frac{M_{FullA}}{L \cdot y_0^{\,2}}$$

$$n_3 = \frac{1}{\frac{\sigma_{FullA}}{S_n} + \frac{\sigma_{FullM}}{S_{ut}}}$$ Fatigue Safety Factor for Case 3

Case 4: Cycling Between Stowed to Full-Down Pressure

$$\rho_{bFullMid} = \frac{\rho_{bMAX}}{2}$$

$$\rho_{sFullMid} = \frac{\rho_{sMAX}}{2}$$

$$\rho_{bFullAlt} = \frac{\rho_{bMAX}}{2}$$

$$\rho_{sFullAlt} = \frac{\rho_{sMAX}}{2}$$

$$M_{FullMid} = \rho_{bFullMid} \cdot x_b \cdot \left[x_{bf} + 0.5 \cdot x_b\right] - \rho_{sFullMid} \cdot x_s \cdot \left[x_p + x_{bf} - x_t\right]$$

$$M_{FullAlt} = \rho_{bFullAlt} \cdot x_b \cdot \left[x_{bf} + 0.5 \cdot x_b\right] - \rho_{sFullAlt} \cdot x_s \cdot \left[x_p + x_{bf} - x_t\right]$$

$$\sigma_{FullMid} = K_t \cdot 6 \cdot \frac{M_{FullMid}}{L \cdot y_0^{\,2}}$$

$$\sigma_{FullAlt} = K_t \cdot 6 \cdot \frac{M_{FullAlt}}{L \cdot y_0^{\,2}}$$

$$n_4 = \frac{1}{\frac{\sigma_{FullAlt}}{S_n} + \frac{\sigma_{FullMid}}{S_{ut}}}$$ Fatigue Safety Factor for Case 4

Static Failure Analysis

$$M_{MAX} = \rho_{bMAX} \cdot x_b \cdot \left[x_{bf} + 0.5 \cdot x_b\right] - \rho_{sMAX} \cdot x_s \cdot \left[x_p + x_{bf} - x_t\right]$$

$$\sigma_{MAX} = K_t \cdot 6 \cdot \frac{M_{MAX}}{L \cdot y_0^{\,2}}$$

$$n_{yield} = \frac{S_y}{\sigma_{MAX}}$$ Safety Factor for Yielding

$$n_{fail} = \frac{S_{ut}}{\sigma_{MAX}}$$ Safety Factor for Failure

SOLUTION
Unit Settings: [kJ]/[C]/[kPa]/[kg]/[degrees]

C_{rel} = 0.814
C_{surf} = 0.79
δ_b = 0.01117 [in]
dM3df = -4.441E-16 [in]
F_c = 24000 [lbf]
$HighHorF_{HIGH}$ = 23443 [lbf]
I_b = 4.641 [in^4]
L = 132 [in]
$LowHorF_{HIGH}$ = 14131 [lbf]
M_2 = 24176 [in-lbf]
M_{bMAX} = 164966 [lbf-in]
C_{size} = 0.9
δ_1 = 0.008844 [in]
dM2df = 1.5 [in]
E = 3.000E+07 [psi]
$HighHorF_a$ = 5243 [lbf]
$HighHorF_m$ = 18200 [lbf]
K_t = 2.27
$LowHorF_A$ = 3761 [lbf]
$LowHorF_M$ = 10370 [lbf]
M_3 = -2.910E-11 [lbf-in]
M_{FloatA} = 30143 [lbf-in]

$M_{FloatAlt}$ = 45167 [lbf-in]
$M_{FloatMid}$ = 45167 [lbf-in]
$M_{FullAlt}$ = 82483 [lbf-in]
$M_{FullMid}$ = 82483 [lbf-in]
n_1 = 3.068 [-]
n_3 = 1.881 [-]
n_{fail} = 3.057 [-]
$\rho_{bFloatAlt}$ = 6136 [lbf/in]
$\rho_{bFullAlt}$ = 10745 [lbf/in]
ρ_{bHighA} = 5190 [lbf/in]
ρ_{bHighM} = 16300 [lbf/in]
$\rho_{bLowHIGH}$ = 12273 [lbf/in]
ρ_{bMAX} = 21490 [lbf/in]
ρ_{fHighM} = 25140 [lbf/in]
ρ_{fLowM} = 17422 [lbf/in]
$\rho_{sFloatMid}$ = 6006 [lbf/in]
$\rho_{sFullMid}$ = 9963 [lbf/in]
ρ_{sHighM} = 15470 [lbf/in]
$\rho_{sLowHIGH}$ = 12011 [lbf/in]
ρ_{sMAX} = 19927 [lbf/in]
$\sigma_{FloatAlt}$ = 8285 [psi]
$\sigma_{FloatMid}$ = 8285 [psi]
$\sigma_{FullAlt}$ = 15130 [psi]
$\sigma_{FullMid}$ = 15130 [psi]
S_n = 26767 [psi]
S_y = 60000 [psi]
x_b = 3.5 [in]
x_{ce} = 6 [in]
x_p = 1.5 [in]
x_t = 0.5 [in]
y_0 = 0.75 [in]

M_{FloatM} = 60191 [lbf-in]
M_{FullA} = 42020 [lbf-in]
M_{FullM} = 122945 [lbf-in]
M_{MAX} = 164966 [lbf-in]
n_2 = 2.506 [-]
n_4 = 1.372 [-]
n_{yield} = 1.983 [-]
$\rho_{bFloatMid}$ = 6136 [lbf/in]
$\rho_{bFullMid}$ = 10745 [lbf/in]
$\rho_{bHighHIGH}$ = 21490 [lbf/in]
ρ_{bLowA} = 3723 [lbf/in]
ρ_{bLowM} = 8550 [lbf/in]
$\rho_{fHighHIGH}$ = 30308 [lbf/in]
$\rho_{fLowHIGH}$ = 21129 [lbf/in]
$\rho_{sFloatAlt}$ = 6006 [lbf/in]
$\rho_{sFullAlt}$ = 9963 [lbf/in]
ρ_{sHighA} = 4457 [lbf/in]
ρ_{sLowA} = 3197 [lbf/in]
ρ_{sLowM} = 8815 [lbf/in]
σ_{FloatA} = 5529 [psi]
σ_{FloatM} = 11041 [psi]
σ_{FullA} = 7708 [psi]
σ_{FullM} = 22552 [psi]
σ_{MAX} = 30260 [psi]
S_{ut} = 92500 [psi]
V_{bMAX} = 35360 [lbf]
x_{bf} = 2.07 [in]
x_f = 2.5 [in]
x_s = 2 [in]
y = 4.07 [in]
z = 5.57 [in]

No unit problems were detected.
Purple units were automatically set. Right click on the variable to confirm or change the units.

Appendix D

Front Plate Strength Investigation EES Code

/ Front Plate Strength Analysis
/ Author: Michael Etheridge
/ Last Revision: September 26, 2005
/
/ Objective:
/ This program is intended to analyze the levels of stress present in the front plate component
/ of the Quick Edge Design. Better understanding of the variables and equations included in this
/ program can be obtained by reading Section 5.1.2 of this report.
/
/ KEY VARIABLES --> See Section 5.1.2

Variable Initialization- See Analysis Write-up for Graphical Definition of Variables

$F_c = 24000$ [lbf] Force of Each Cylinder

$L = 9.5$ [ft] $\cdot$ 12 [in/ft] Total Length of Front Plate

$x_{ce} = 6$ [in] Height of Cutting Edges

$y_0 = 0.75$ [in] Thickness of Front Plate

$y_e = 0.25$ [in] Final Tapered Thickness of Front Plate

$x_f = 2.5$ [in] Front Plate Contact Length with Cutting Edges

$x_b = 3.5$ [in] Moldboard Contact Length With Cutting Edges

$x_t = 0.5$ [in] Tapered Length at Cutting Edges Top

$x_p = 1.5$ [in] Distance from Top of Cutting Edge to Pin Holes

$x_{ff} = 1.42$ [in] Free Length on Front Plate

$x_{fp} = 2.92$ [in] Distance from Bolts to Pin Holes

Force Relations for Float Loading

$LowHorF_m = 10370$ [lbf] Mean X Force

$LowHorF_a = 3761$ [lbf] Alternating X Force

$LowHorF_{HIGH} = LowHorF_m + LowHorF_a$

$$F_c + \rho_{bLowM} \cdot x_b = LowHorF_m + \rho_{fLowM} \cdot x_f$$

$$-\rho_{fLowM} \cdot x_f \cdot \left[0.5 \cdot x_f - x_p\right] + 2/7 \cdot \left[x_{ce} - x_p\right] \cdot LowHorF_m + \rho_{bLowM} \cdot x_b \cdot \left[0.5 \cdot x_b + x_t - x_p\right] - LowHorF_m \cdot \left[x_{ce} - x_p\right] = 0$$

$$F_c + \rho_{bLowHIGH} \cdot x_b = LowHorF_{HIGH} + \rho_{fLowHIGH} \cdot x_f$$

$$-\rho_{fLowHIGH} \cdot x_f \cdot \left[0.5 \cdot x_f - x_p\right] + 2/7 \cdot \left[x_{ce} - x_p\right] \cdot LowHorF_{HIGH} + \rho_{bLowHIGH} \cdot x_b \cdot \left[0.5 \cdot x_b + x_t - x_p\right]$$

$$- LowHorF_{HIGH} \cdot [x_{ce} - x_p] = 0$$

$$\rho_{fLowA} = \rho_{fLowHIGH} - \rho_{fLowM}$$

Force Relations for Full-Down Loading

$HighHorF_m = 18200$ [lbf] Mean X Force

$HighHorF_a = 5243$ [lbf] Alternating X Force

$$HighHorF_{HIGH} = HighHorF_m + HighHorF_a$$

$$F_c + \rho_{bHighM} \cdot x_b = HighHorF_m + \rho_{fHighM} \cdot x_f$$

$$- \rho_{fHighM} \cdot x_f \cdot [0.5 \cdot x_f - x_p] + 2/7 \cdot [x_{ce} - x_p] \cdot HighHorF_m + \rho_{bHighM} \cdot x_b \cdot [0.5 \cdot x_b + x_t - x_p] - HighHorF_m \cdot [x_{ce} - x_p] = 0$$

$$F_c + \rho_{bHighHIGH} \cdot x_b = HighHorF_{HIGH} + \rho_{fHighHIGH} \cdot x_f$$

$$- \rho_{fHighHIGH} \cdot x_f \cdot [0.5 \cdot x_f - x_p] + 2/7 \cdot [x_{ce} - x_p] \cdot HighHorF_{HIGH} + \rho_{bHighHIGH} \cdot x_b \cdot [0.5 \cdot x_b + x_t - x_p] - HighHorF_{HIGH} \cdot [x_{ce} - x_p] = 0$$

$$\rho_{fHighA} = \rho_{fHighHIGH} - \rho_{fHighM}$$

$$\rho_{fMAX} = \rho_{fHighHIGH}$$

Finding the Maximum Deflection for Full-Down Loading

$E = 3 \times 10^7$ [psi] Modulus of Elasticity for Steel

$$y_x = y_0 - [y_0 - y_e] \cdot \frac{x}{x_f}$$ Front Plate Tapered Thickness as a Function of Length

$$y_z = y_0 - [y_0 - y_e] \cdot \frac{z}{x_f}$$

$$I_{f1} = L \cdot \frac{y_x^3}{12}$$

$$I_{f2} = L \cdot \frac{y_z^3}{12}$$ Moment of Inertia as a Function of x

$$M_1 = \rho_{fMAX} \cdot [0.5 \cdot x_f^2 + x_f \cdot x_{ff} - x \cdot x_f]$$

$$M_2 = \rho_{fMAX} \cdot [0.5 \cdot x_f^2 + x_f \cdot x_{ff} - z \cdot x_f] + 0.5 \cdot \rho_{fMAX} \cdot [z - x_{ff}]^2$$

$$dM1df = x_f + x_{ff} - x$$

$dM2df = x_f + x_{ff} - z$

$$\delta_f = \frac{1}{E} \cdot \left[\int_0^{x_{ff}} \left(dM1df \cdot \frac{M_1}{I_{f1}} \right) d\,x + \int_{x_{ff}}^{x_f} \left(dM2df \cdot \frac{M_2}{I_{f2}} \right) d\,z \right]$$

Solving for Fatigue Safety Factors

$S_{ut} = 92500$ [psi] Ultimate Strength for 1045 HR Steel

$S_y = 60000$ [psi] Yield Strength for 1045 HR Steel

$y_{fp} = y_0 - [y_0 - y_e] \cdot \frac{x_{fp}}{x_f}$ Face Plate Thickness at Pin Hole

$K_t = 2.27$ Stress Concentration Factor at Bolt Hole [15, p.150]

$C_{size} = 0.9$ Fatigue Size Factor for c < 2.5 cm

$C_{rel} = 0.814$ Fatigue 99% Reliability Factor [15, p.316]

$C_{surf} = 0.79$ Fatigue Machined Surface Factor [15, p.314]

$S_n = C_{size} \cdot C_{rel} \cdot C_{surf} \cdot 0.5 \cdot S_{ut}$ Adjusted Endurance Limit Calculation

Case 1: During Standard Plow Run (Float)

$M_{FloatM} = \rho_{fLowM} \cdot [0.5 \cdot x_f^2 + x_{ff} \cdot x_f]$

$M_{FloatA} = \rho_{fLowA} \cdot [0.5 \cdot x_f^2 + x_{ff} \cdot x_f]$

$\sigma_{FloatM} = K_t \cdot 6 \cdot \frac{M_{FloatM}}{L \cdot y_0^2}$

$\sigma_{FloatA} = K_t \cdot 6 \cdot \frac{M_{FloatA}}{L \cdot y_0^2}$

$n_1 = \frac{1}{\frac{\sigma_{FloatA}}{S_n} + \frac{\sigma_{FloatM}}{S_{ut}}}$ Fatigue Safety Factor for Case 1

Case 2: Cycling Between Stowed to Float Pressure

$\rho_{FloatMid} = \frac{\rho_{fLowHIGH}}{2}$

$\rho_{FloatAlt} = \frac{\rho_{fLowHIGH}}{2}$

$$M_{FloatMid} = \rho_{FloatMid} \cdot \left[0.5 \cdot x_f^2 + x_{ff} \cdot x_f\right]$$

$$M_{FloatAlt} = \rho_{FloatAlt} \cdot \left[0.5 \cdot x_f^2 + x_{ff} \cdot x_f\right]$$

$$\sigma_{FloatMid} = K_t \cdot 6 \cdot \frac{M_{FloatMid}}{L \cdot y_0^2}$$

$$\sigma_{FloatAlt} = K_t \cdot 6 \cdot \frac{M_{FloatAlt}}{L \cdot y_0^2}$$

$$n_2 = \frac{1}{\frac{\sigma_{FloatAlt}}{S_n} + \frac{\sigma_{FloatMid}}{S_{ut}}}$$ Fatigue Safety Factor for Case 2

Case 3: High Download Plow Run (Full-Down Pressure)

$$M_{FullM} = \rho_{fHighM} \cdot \left[0.5 \cdot x_f^2 + x_{ff} \cdot x_f\right]$$

$$M_{FullA} = \rho_{fHighA} \cdot \left[0.5 \cdot x_f^2 + x_{ff} \cdot x_f\right]$$

$$\sigma_{FullM} = K_t \cdot 6 \cdot \frac{M_{FullM}}{L \cdot y_0^2}$$

$$\sigma_{FullA} = K_t \cdot 6 \cdot \frac{M_{FullA}}{L \cdot y_0^2}$$

$$n_3 = \frac{1}{\frac{\sigma_{FullA}}{S_n} + \frac{\sigma_{FullM}}{S_{ut}}}$$ Fatigue Safety Factor for Case 3

Case 4: Cycling Between Stowed to Full-Down Pressure

$$\rho_{FullMid} = \frac{\rho_{fMAX}}{2}$$

$$\rho_{FullAlt} = \frac{\rho_{fMAX}}{2}$$

$$M_{FullMid} = \rho_{FullMid} \cdot \left[0.5 \cdot x_f^2 + x_{ff} \cdot x_f\right]$$

$$M_{FullAlt} = \rho_{FullAlt} \cdot \left[0.5 \cdot x_f^2 + x_{ff} \cdot x_f\right]$$

$$\sigma_{FullMid} = K_t \cdot 6 \cdot \frac{M_{FullMid}}{L \cdot y_0^2}$$

$$\sigma_{FullAlt} = K_t \cdot 6 \cdot \frac{M_{FullAlt}}{L \cdot y_0^2}$$

$$n_4 = \frac{1}{\frac{\sigma_{FullAlt}}{S_n} + \frac{\sigma_{FullMid}}{S_{ut}}}$$ Fatigue Safety Factor for Case 4

$$1 = \frac{\sigma_{FullAlt}}{S_f} + \frac{\sigma_{FullMid}}{S_{ut}}$$

$$\mathbf{log}\left[S_f \cdot 1 \quad [1/psi]\right] = 1/3 \cdot \mathbf{log}\left[\frac{S_n}{0.9 \cdot S_{ut}}\right] \cdot \mathbf{log}\left[N_{full}\right] + \mathbf{log}\left[\frac{(0.9 \cdot S_{ut})^2}{S_n \cdot 1 \quad [psi]}\right]$$

Static Failure Analysis

$$M_{MAX} = \rho_{fMAX} \cdot \left[0.5 \cdot x_f^2 + x_{ff} \cdot x_f\right]$$

$$\sigma_{MAX} = K_t \cdot 6 \cdot \frac{M_{MAX}}{L \cdot y_0^2}$$

$$n_{yield} = \frac{S_y}{\sigma_{MAX}}$$ Safety Factor for Yielding

$$n_{fail} = \frac{S_{ut}}{\sigma_{MAX}}$$ Safety Factor for Failure

SOLUTION
Unit Settings: [kJ]/[C]/[kPa]/[kg]/[degrees]

C_{rel} = 0.814
C_{surf} = 0.79
dM1df = 2.5 [in]
E = 3.000E+07 [psi]
$HighHorF_a$ = 5243 [lbf]
$HighHorF_m$ = 18200 [lbf]
I_{f2} = 0.1484 [in^4]
L = 114 [in]
$LowHorF_{HIGH}$ = 14131 [lbf]
M_1 = 94713 [lbf-in]
M_{FloatA} = 24746 [lbf-in]
M_{FloatM} = 116291 [lbf-in]
M_{FullA} = 34497 [lbf-in]
M_{FullM} = 167810 [lbf-in]
M_{MAX} = 202307 [lbf-in]
n_2 = 1.386 [-]
n_4 = 0.9663 [-]
N_{full} = 762810
$\rho_{bHighHIGH}$ = 21490 [lbf/in]
$\rho_{bLowHIGH}$ = 12273 [lbf/in]
ρ_{fHighA} = 5168 [lbf/in]
ρ_{fHighM} = 25140 [lbf/in]
$\rho_{FloatMid}$ = 10565 [lbf/in]
$\rho_{fLowHIGH}$ = 21129 [lbf/in]

C_{size} = 0.9
δ_f = 0.02007 [in]
dM2df = 1.42 [in]
F_c = 24000 [lbf]
$HighHorF_{HIGH}$ = 23443 [lbf]
I_{f1} = 0.9613 [in^4]
K_t = 2.27
$LowHorF_a$ = 3761 [lbf]
$LowHorF_m$ = 10370 [lbf]
M_2 = 30557 [lbf-in]
$M_{FloatAlt}$ = 70518 [lbf-in]
$M_{FloatMid}$ = 70518 [lbf-in]
$M_{FullAlt}$ = 101153 [lbf-in]
$M_{FullMid}$ = 101153 [lbf-in]
n_1 = 2.158 [-]
n_3 = 1.517 [-]
n_{fail} = 2.153 [-]
n_{yield} = 1.396 [-]
ρ_{bHighM} = 16300 [lbf/in]
ρ_{bLowM} = 8550 [lbf/in]
$\rho_{fHighHIGH}$ = 30308 [lbf/in]
$\rho_{FloatAlt}$ = 10565 [lbf/in]
ρ_{fLowA} = 3707 [lbf/in]
ρ_{fLowM} = 17422 [lbf/in]

ρ_{fMAX} = 30308 [lbf/in]
$\rho_{FullMid}$ = 15154 [lbf/in]
$\sigma_{FloatAlt}$ = 14978 [psi]
$\sigma_{FloatMid}$ = 14978 [psi]
$\sigma_{FullAlt}$ = 21485 [psi]
$\sigma_{FullMid}$ = 21485 [psi]
S_f = 27985 [psi]
S_{ut} = 92500 [psi]
x = 1.42 [in]
x_{ce} = 6 [in]
x_{ff} = 1.42 [in]
x_p = 1.5 [in]
y_0 = 0.75 [in]
y_{fp} = 0.166 [in]
y_z = 0.25 [in]

$\rho_{FullAlt}$ = 15154 [lbf/in]
σ_{FloatA} = 5256 [psi]
σ_{FloatM} = 24700 [psi]
σ_{FullA} = 7327 [psi]
σ_{FullM} = 35642 [psi]
σ_{MAX} = 42969 [psi]
S_n = 26767 [psi]
S_y = 60000 [psi]
x_b = 3.5 [in]
x_f = 2.5 [in]
x_{fp} = 2.92 [in]
x_t = 0.5 [in]
y_e = 0.25 [in]
y_x = 0.466 [in]
z = 2.5 [in]

No unit problems were detected.
Purple units were automatically set. Right click on the variable to confirm or change the units.

Appendix E

Support Pin Strength Investigation EES Code

/ Pin Strength Analysis
/ Author: Michael Etheridge
/ Last Revision: September 26, 2005
/
/ Objective:
/ This program is intended to analyze the levels of stress present in the pin components
/ in the Quick Edge Design. Better understanding of the variables and equations included in this
/ program can be obtained by reading Section 5.1.2 of this report.
/
/ KEY VARIABLES --> See Section 5.1.2

Variable Initialization- See Analysis Write-up for Graphical Definition of Variables

$t_{ce} = 0.75$ [in] Cutting Edge Thickness

$d_{major} = 1$ [in] Larger Pin Diameter

$d_{minor} = 5 / 8 \cdot 1$ [in] Smaller Pin Diameter

Force Relations for Float Loading

$LowVertF_M = \frac{10560 \text{ [lbf]}}{13}$ Mean Y Force Per Supporting Pin or Bolt

$LowVertF_A = \frac{4200 \text{ [lbf]}}{13}$ Alternating Y Force Per Supporting Pin or Bolt

$LowVertF_{HIGH} = LowVertF_M + LowVertF_A$

$\omega_{ceLowM} = \frac{LowVertF_M}{t_{ce}}$

$\omega_{ceLowA} = \frac{LowVertF_A}{t_{ce}}$

$\omega_{ceLowHIGH} = \omega_{ceLowM} + \omega_{ceLowA}$

Force Relations for Full-Down Loading

$HighVertF_M = \frac{22200 \text{ [lbf]}}{13}$ Mean Y Force Per Pin or Bolt

$HighVertF_A = \frac{5400 \text{ [lbf]}}{13}$ Alternating Y Force Per Pin or Bolt

$HighVertF_{HIGH} = HighVertF_M + HighVertF_A$

$$\omega_{ceHighM} = \frac{HighVertF_M}{t_{ce}}$$

$$\omega_{ceHighA} = \frac{HighVertF_A}{t_{ce}}$$

$$\omega_{ceMAX} = \omega_{ceHighM} + \omega_{ceHighA}$$

Solving for Fatigue Safety Factors

$S_{ut} = 130000$ [psi] Ultimate Strength for 414 Cold-Worked Stainless Steel

$S_y = 110000$ [psi] Yield Strength for 414 Cold-Worked Stainless Steel

$K_t = 1.82$ Stress Concentration Factor at Bolt Hole [15, p.145]

$q = 0.83$ Fatigue Notch Sensivity Factor [15, p.328]

$K_f = 1 + [K_t - 1] \cdot q$ Notch-Fatigue Adjusted Stress Concentration Factor

$C_{size} = 0.9$ Fatigue Size Factor for d < 5 cm

$C_{rel} = 0.814$ Fatigue 99% Reliability Factor [15, p.316]

$C_{surf} = 0.73$ Fatigue Machined Surface Factor [15, p.314]

$S_n = C_{size} \cdot C_{rel} \cdot C_{surf} \cdot 0.5 \cdot S_{ut}$ Adjusted Endurance Limit Calculation

Case 1: During Standard Plow Run (Float)

$$M_{FloatM} = 0.5 \cdot \omega_{ceLowM} \cdot t_{ce}^{\ 2}$$

$$M_{FloatA} = 0.5 \cdot \omega_{ceLowA} \cdot t_{ce}^{\ 2}$$

$$\sigma_{FloatM} = K_f \cdot 32 \cdot \frac{M_{FloatM}}{\pi \cdot d_{minor}^{\ 3}}$$

$$\sigma_{FloatA} = K_f \cdot 32 \cdot \frac{M_{FloatA}}{\pi \cdot d_{minor}^{\ 3}}$$

$$n_1 = \frac{1}{\frac{\sigma_{FloatA}}{S_n} + \frac{\sigma_{FloatM}}{S_{ut}}}$$ Fatigue Safety Factor for Case 1

Case 2: Cycling Between Stowed to Float Pressure

$$\omega_{FloatMid} = \frac{\omega_{ceLowHIGH}}{2}$$

$$\omega_{FloatAlt} = \frac{\omega_{ceLowHIGH}}{2}$$

$$M_{FloatMid} = 0.5 \cdot \omega_{FloatMid} \cdot t_{ce}^{2}$$

$$M_{FloatAlt} = 0.5 \cdot \omega_{FloatAlt} \cdot t_{ce}^{2}$$

$$\sigma_{FloatMid} = K_f \cdot 32 \cdot \frac{M_{FloatMid}}{\pi \cdot d_{minor}^{3}}$$

$$\sigma_{FloatAlt} = K_f \cdot 32 \cdot \frac{M_{FloatAlt}}{\pi \cdot d_{minor}^{3}}$$

$$n_2 = \frac{1}{\frac{\sigma_{FloatAlt}}{S_n} + \frac{\sigma_{FloatMid}}{S_{ut}}}$$ Fatigue Safety Factor for Case 2

Case 3: High Download Plow Run (Full-Down Pressure)

$$M_{FullM} = 0.5 \cdot \omega_{ceHighM} \cdot t_{ce}^{2}$$

$$M_{FullA} = 0.5 \cdot \omega_{ceHighA} \cdot t_{ce}^{2}$$

$$\sigma_{FullM} = K_f \cdot 32 \cdot \frac{M_{FullM}}{\pi \cdot d_{minor}^{3}}$$

$$\sigma_{FullA} = K_f \cdot 32 \cdot \frac{M_{FullA}}{\pi \cdot d_{minor}^{3}}$$

$$n_3 = \frac{1}{\frac{\sigma_{FullA}}{S_n} + \frac{\sigma_{FullM}}{S_{ut}}}$$ Fatigue Safety Factor for Case 3

Case 4: Cycling Between Stowed to Full-Down Pressure

$$\omega_{FullMid} = \frac{\omega_{ceMAX}}{2}$$

$$\omega_{FullAlt} = \frac{\omega_{ceMAX}}{2}$$

$$M_{FullMid} = 0.5 \cdot \omega_{FullMid} \cdot t_{ce}^{2}$$

$$M_{FullAlt} = 0.5 \cdot \omega_{FullAlt} \cdot t_{ce}^{2}$$

$$\sigma_{FullMid} = K_f \cdot 32 \cdot \frac{M_{FullMid}}{\pi \cdot d_{minor}^{3}}$$

$$\sigma_{FullAlt} = K_f \cdot 32 \cdot \frac{M_{FullAlt}}{\pi \cdot d_{minor}^{3}}$$

$$n_4 = \frac{1}{\frac{\sigma_{FullAlt}}{S_n} + \frac{\sigma_{FullMid}}{S_{ut}}}$$ Fatigue Safety Factor for Case 4

$$1 = \frac{\sigma_{FullAlt}}{S_f} + \frac{\sigma_{FullMid}}{S_{ut}}$$

$$\mathbf{log}\left[S_f \cdot 1 \quad [1/psi]\right] = 1/3 \cdot \mathbf{log}\left[\frac{S_n}{0.9 \cdot S_{ut}}\right] \cdot \mathbf{log}\left[n_{full}\right] + \mathbf{log}\left[\frac{(0.9 \cdot S_{ut})^2}{S_n \cdot 1 \quad [psi]}\right]$$

Static Failure Analysis

$$M_{MAX} = 0.5 \cdot \omega_{ceMAX} \cdot t_{ce}^{\ 2}$$

$$\sigma_{MAX} = K_t \cdot 32 \cdot \frac{M_{MAX}}{\pi \cdot d_{minor}^{\ 3}}$$

$$n_{yield} = \frac{S_y}{\sigma_{MAX}}$$ Safety Factor for Yielding

$$n_{fail} = \frac{S_{ut}}{\sigma_{MAX}}$$ Safety Factor for Failure

SOLUTION
Unit Settings: [kJ]/[C]/[kPa]/[kg]/[degrees]

C_{rel} = 0.814
C_{surf} = 0.73
d_{minor} = 0.625 [in]
$HighVertF_{HIGH}$ = 2123 [lbf]
K_f = 1.681 [-]
$LowVertF_A$ = 323.1 [lbf]
$LowVertF_M$ = 812.3 [lbf]
$M_{FloatAlt}$ = 212.9 [lbf-in]
$M_{FloatMid}$ = 212.9 [lbf-in]
$M_{FullAlt}$ = 398.1 [lbf-in]
$M_{FullMid}$ = 398.1 [lbf-in]
n_1 = 2.447 [-]
n_3 = 1.516 [-]
n_{fail} = 2.15 [-]
n_{yield} = 1.82 [-]
$\omega_{ceHighM}$ = 2277 [lbf/in]
$\omega_{ceLowHIGH}$ = 1514 [lbf/in]
ω_{ceMAX} = 2831 [lbf/in]
$\omega_{FloatMid}$ = 756.9 [lbf/in]
$\omega_{FullMid}$ = 1415 [lbf/in]
σ_{FloatA} = 8495 [psi]
σ_{FloatM} = 21359 [psi]
σ_{FullA} = 10922 [psi]
σ_{FullM} = 44902 [psi]

C_{size} = 0.9
d_{major} = 1 [in]
$HighVertF_A$ = 415.4 [lbf]
$HighVertF_M$ = 1708 [lbf]
K_t = 1.82
$LowVertF_{HIGH}$ = 1135 [lbf]
M_{FloatA} = 121.2 [lbf-in]
M_{FloatM} = 304.6 [lbf-in]
M_{FullA} = 155.8 [lbf-in]
M_{FullM} = 640.4 [lbf-in]
M_{MAX} = 796.2 [lbf-in]
n_2 = 1.837 [-]
n_4 = 0.9826 [-]
n_{full} = 881115
$\omega_{ceHighA}$ = 553.8 [lbf/in]
ω_{ceLowA} = 430.8 [lbf/in]
ω_{ceLowM} = 1083 [lbf/in]
$\omega_{FloatAlt}$ = 756.9 [lbf/in]
$\omega_{FullAlt}$ = 1415 [lbf/in]
q = 0.83
$\sigma_{FloatAlt}$ = 14927 [psi]
$\sigma_{FloatMid}$ = 14927 [psi]
$\sigma_{FullAlt}$ = 27912 [psi]
$\sigma_{FullMid}$ = 27912 [psi]

σ_{MAX} = 60454 [psi]
S_n = 34762 [psi]
S_y = 110000 [psi]
S_f = 35544 [psi]
S_{ut} = 130000 [psi]
t_{ce} = 0.75 [in]

No unit problems were detected.
Purple units were automatically set. Right click on the variable to confirm or change the units.

Appendix F

Prototype and Final Design BOM's

Prototype BOM:

Quantity	Component Name	Component Description	Supplier	Manufacturer	Model Number	Unit Cost	Total Cost
1	Upper Moldboard	3/4" Formed Steel Plate	Moorhead Machinery and Boiler Co.	Moorhead Machinery and Boiler Co.	Custom	$482.33	$482.33
1	Bottom Moldboard	3/4" Formed Steel Plate	Moorhead Machinery and Boiler Co.	Moorhead Machinery and Boiler Co.	Custom	$482.33	$482.33
1	Front Plate	3/4" Formed Steel Plate	Moorhead Machinery and Boiler Co.	Moorhead Machinery and Boiler Co.	Custom	$482.33	$482.33
1	Upper Plow Extension	1/2" Formed Steel Plate	Moorhead Machinery and Boiler Co.	Moorhead Machinery and Boiler Co.	Custom	$397.00	$397.00
8 ft	Mounting Shaft	1 1/2" Steel Rod	McMaster-Carr	McMaster-Carr	8924K51	$10.20	$81.56
6 ft	Mounting Tube	2 1/8" OD, 1 5/8" ID Steel Tube	McMaster-Carr	McMaster-Carr	7767T576	$19.44	$116.64
11 ft	Plow Joint Shaft	7/8" Steel Rod	McMaster-Carr	McMaster-Carr	8924K41	$4.43	$48.82
11 ft	Plow Joint Tube	1 1/2" OD, 1" ID Steel Tube	McMaster-Carr	McMaster-Carr	89955K96	$8.53	$93.83
3	Right Hydaulic Support	Custom Manufactured Part	University of Minnesota	Mechanical Engineering Research Shop	Custom	n/a	n/a
3	Left Hydraulic Support	Custom Manufactured Part	University of Minnesota	Mechanical Engineering Research Shop	Custom	n/a	n/a
2	Outer Pin Plate	Custom Manufactured Part	University of Minnesota	Mechanical Engineering Research Shop	Custom	n/a	n/a
1	Inner Pin Plate	Custom Manufactured Part	University of Minnesota	Mechanical Engineering Research Shop	Custom	n/a	n/a
2	4' Cutting Edge	Cutting Edge Provided by Mn/DOT	Golden Valley Shop	Pacal Industries	n/a	n/a	n/a
1	3' Cutting Edge	Cutting Edge Provided by Mn/DOT	Golden Valley Shop	Pacal Industries	n/a	n/a	n/a
136 hrs	General Machining Costs	All Machining Costs Incurred (Includes Custom Parts)	University of Minnesota	Mechanical Engineering Research Shop	n/a	$46.00	$6,256.00
4	Hex Bolt	5/8"-18 x 3" Hex Bolt	McMaster-Carr	McMaster-Carr	92198A487	$3.09	$12.36
8	Countersunk Bolt	5/8"-18 x 3.5" Countersunk Bolt	McMaster-Carr	McMaster-Carr	92210A808	$8.20	$65.60
12	Hex Bolt	5/8"-18 x 4" Hex Bolt	McMaster-Carr	McMaster-Carr	92198A490	$3.60	$43.20
6	Countersunk Bolt	5/8"-18 x 4" Countersunk Bolt	McMaster-Carr	McMaster-Carr	92210A810	$9.54	$57.24
6	Hex Bolt	5/8"-18 x 4.5" Hex Bolt	McMaster-Carr	McMaster-Carr	91257A832	$1.94	$11.62
2	Countersunk Bolt	5/8"-18 x 3" Countersunk Bolt	McMaster-Carr	McMaster-Carr	92210A806	$4.64	$9.28
3	Hex Bolt	5/8"-18 x 7.5" Hex Bolt	McMaster-Carr	McMaster-Carr	91247A455	$4.10	$12.30
82	Nut	5/8"-18 Standard Nut	McMaster-Carr	McMaster-Carr	90083A235	$0.60	$49.04
68	Washer	5/8" Standard Washer	McMaster-Carr	McMaster-Carr	98038A268	$0.18	$12.16
3	Hydraulic Cylinder	2 1/2" x 4" 2500 psi Hydraulic Cylinder (SAE #4)	Force America	Quadra Trading Corp	Surplus	$148.00	$444.00
1	Hydraulic Power Unit	12V DC Hydraulic Power Unit (w/ KP08 Pump)	Force America	SPX Fluid Power (Fennerstone)	DC60SF	$470.93	$470.93
2	Hydraulic Manifold	3 Port, 90 Degree, 1/4" NPT, Aluminum Manifold	A1 Manifold Supply	A1 Manifold Supply	MS0303-90	$19.33	$38.66
1	Pressure Gauge	3000 psi Hydraulic Pressure Gauge	Northern Tool and Equipment	Buyers	4061	$15.45	$15.45
60 ft	Hydraulic Hose	Hydraulic Hosing Needed to Connect Power Unit	Pirtek USA	Pirtek USA	n/a	$3.25	$195.00
n/a	Hydraulic Fittings	Adapters, Fittings, and Labor	Pirtek USA	Pirtek USA	n/a	$262.00	$262.00
						Total Prototype Cost:	$10,139.68

Quick Edge Design BOM:

Quantity	Component Name	Component Description	Supplier	Manufacturer	Unit Cost	Total Cost
1	Underbody Assembly	Standard Underbody Assembly Fitted with Quick Edge Revisions	Root Spring Scraper Co.	Root Spring Scraper Co.	N/A	Baseline
1	Quick Edge Moldboard	Moldboard Incorporating Quick Edge Revisions	Root Spring Scraper Co.	Root Spring Scraper Co.	$300.00	$300.00
1	Quick Edge front Plate	Front Plate as Specified by Quick Edge Design	Root Spring Scraper Co.	Root Spring Scraper Co.	$300.00	$300.00
3	Right Hydaulic Support	As Specified in Quick Edge Design	Root Spring Scraper Co.	Root Spring Scraper Co.	$40.00	$120.00
3	Left Hydraulic Support	As Specified in Quick Edge Design	Root Spring Scraper Co.	Root Spring Scraper Co.	$40.00	$120.00
2	Outer Pin Plate	As Specified in Quick Edge Design	Root Spring Scraper Co.	Root Spring Scraper Co.	$65.00	$130.00
1	Inner Pin Plate	As Specified in Quick Edge Design	Root Spring Scraper Co.	Root Spring Scraper Co.	$65.00	$65.00
6	Plow Bolt	5/8"-18 x 3" Grade 8 Plow Bolt	Mn/DOT Maintenance Shop Supplies	Various Suppliers	$1.30	$7.80
8	Plow Bolt	5/8"-18 x 3.5" Grade 8 Plow Bolt	Mn/DOT Maintenance Shop Supplies	Various Suppliers	$1.52	$12.16
18	Plow Bolt	5/8"-18 x 4" Grade 8 Plow Bolt	Mn/DOT Maintenance Shop Supplies	Various Suppliers	$1.73	$31.14
6	Plow Bolt	5/8"-18 x 4.5" Grade 8 Plow Bolt	Mn/DOT Maintenance Shop Supplies	Various Suppliers	$1.95	$11.70
3	Hex Bolt	5/8"-18 x 7.5" Hex Bolt	Mn/DOT Maintenance Shop Supplies	Various Suppliers	$4.10	$12.30
82	Nut	5/8"-18 Grade 8 Nut	Mn/DOT Maintenance Shop Supplies	*Price Included in Bolt Cost	n/a	n/a
68	Washer	5/8" Standard Washer	Mn/DOT Maintenance Shop Supplies	*Price Included in Bolt Cost	n/a	n/a
3	Hydraulic Cylinder	1.5" x 3" 2500 psi Hydraulic Cylinder	Mn/DOT Maintenance Shop Supplies	Various Suppliers	$150.00	$450.00
2	Hydraulic Manifold	3 Port, 90 Degree, 1/4" NPT, Aluminum Manifold	A1 Manifold Supply	A1 Manifold Supply	$19.33	$38.66
n/a	Hydaulic Hose	Hydraulic Hose Needed to Tap Into Truck's Feed	Mn/DOT Maintenance Shop Supplies	Various Suppliers	$100.00	$100.00
n/a	Hydraulic Fittings	Adapters and Fittings Required for the Hydraulic System	Mn/DOT Maintenance Shop Supplies	Various Suppliers	$80.00	$80.00
					Total Quick Edge Cost Increase:	$1,778.76